DRAWING NUMBER
NT-UI-001
ALT

REGULAR MODEL

WOMEN 1
MEN 1

ALT.No,	ALTERATION	DATE

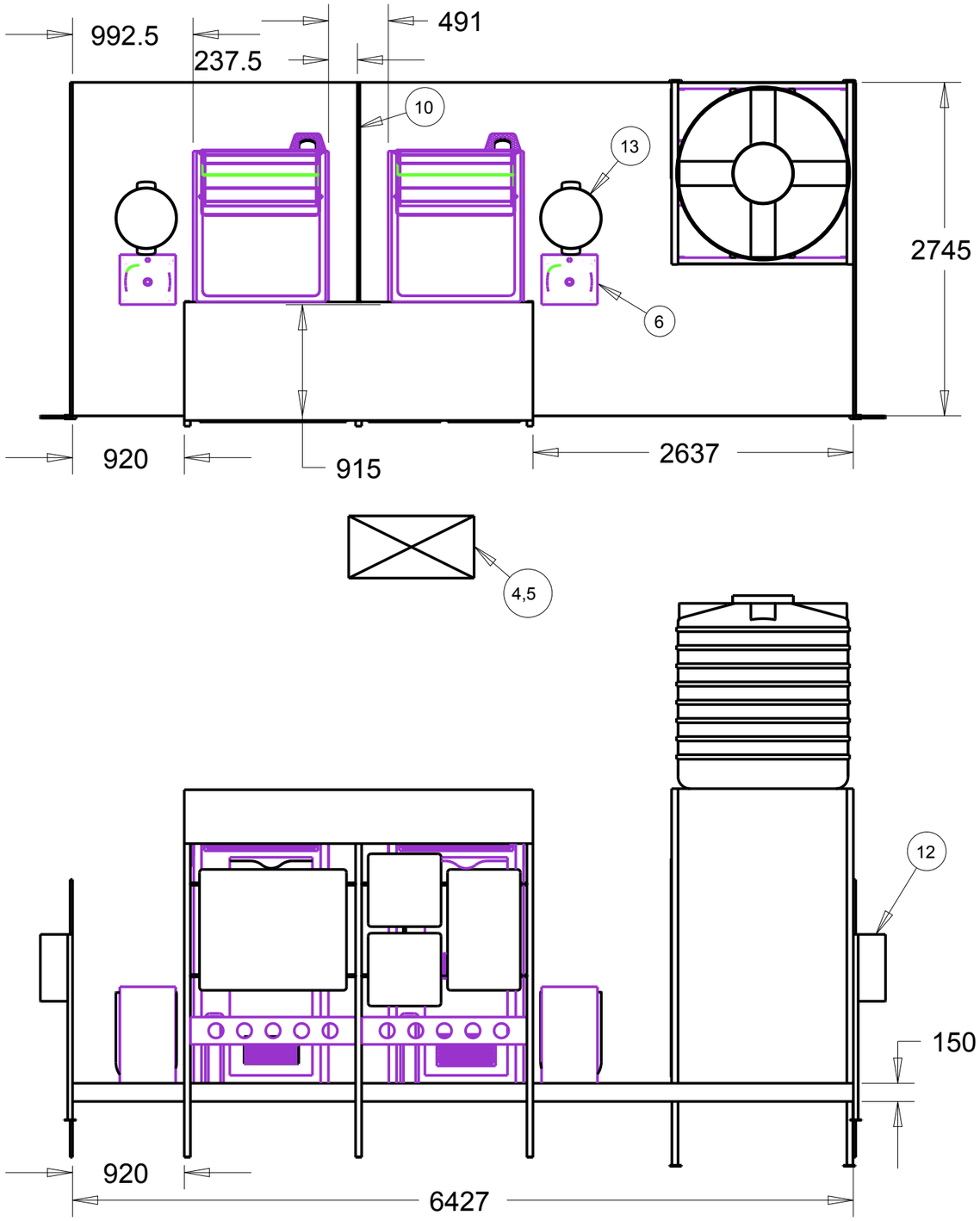

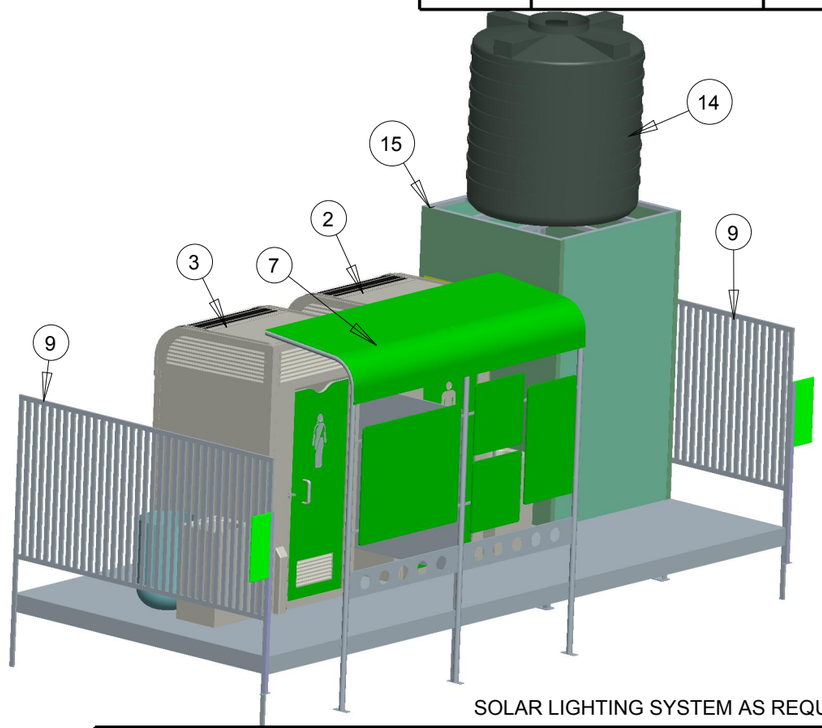

SOLAR LIGHTING SYSTEM AS REQUIRED

SLNO.	DESCRIPTION & DIMENSIONS	QTY	REF.DRG.	MAT.&SPEC.	WEIGHT/UNIT
16	URINAL	-		AISI304/COMPOSITES	
15	OHT-STRUCTURES	1		M.S/COMPOSITE	
14	WATER TANK 2000 LITRES	1		HDPE	
13	DUST BIN	2		MILD STEEL	
12	DIRECTION BOARD	2		M.S/COMPOSITE	
11	S.S RAILINGS FOR PC	-		AISI304	
10	M.S.PARTITION WITH COMPOSITE PANEL	1		MILD STEEL	
9	M.S. CHANNEL PARTITION	2		MILD STEEL	
8	PARTITION FRAME FOR PC (CANOPY)	-		AISI304/COMPOSITE	
7	PARTITION FRAME FRONT (CANOPY)	1		AISI304/COMPOSITE	
6	WASH BASIN WITH SOAP DISPENSOR	2		COMPOSITE/SSBASIN	
5	SOLAR POWERED STREET LIGHT	1		-	
4	SOLAR PANEL WITH LED LIGHT	2		-	
3	MEN MODULAR ROW TOILET STALL	1		COMPOSITE	
2	WOMEN MODULAR ROW TOILET STALL	1		COMPOSITE	
1	P.C. MODULAR TOILET STALL	-		COMPOSITE	

SUPERSEDED BY:

SUPERSEDES:

DRN	R.MAHENDRAN.
CHD	N.MASTAN
APD	R K M

DRAWING NAME

NAMMA TOILET

1 REG MEN + 1 REG WOMEN

DRAWING NUMBER

NT-UI-001

COMMISSIONERATE OF MUNICIPAL ADMINISTRATION,
CHEPAUK CHENNAI - 600005

SCALE 0.025

SHEET OF A3

ALT

A3

DRAWING NUMBER	REGULAR MODEL
NT-UI-002	WOMEN 1 - MEN 1 URINAL 1
ALT	

ALT.No,	ALTERATION	DATE

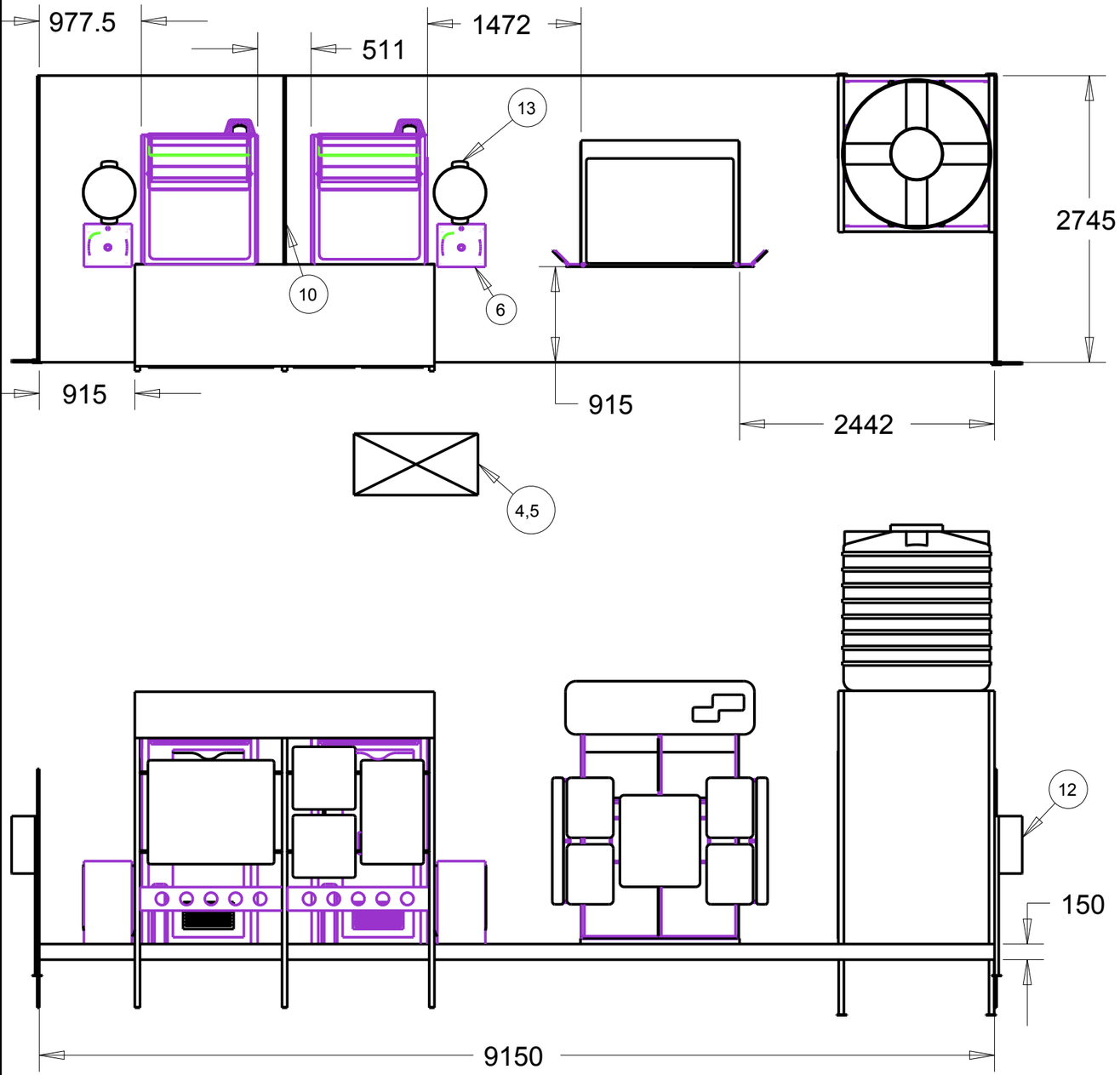

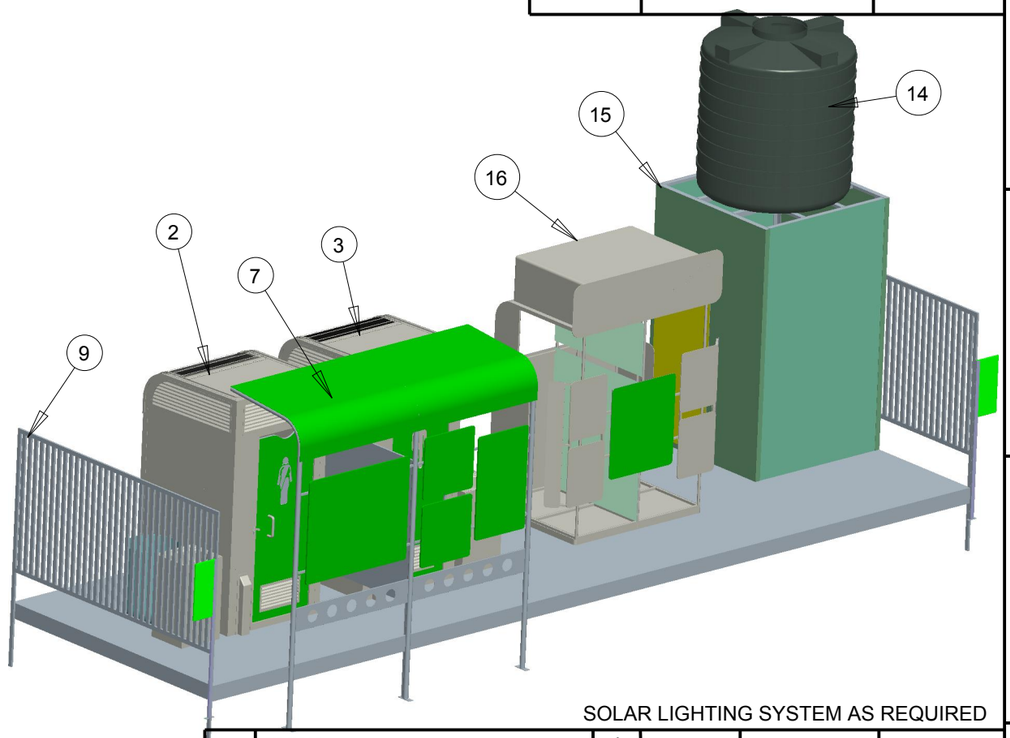

SOLAR LIGHTING SYSTEM AS REQUIRED

SLNO.	DESCRIPTION & DIMENSIONS	QTY	REF.DRG.	MAT.&SPEC.	WEIGHT/UNIT
16	URINAL	1		AISI304/COMPOSITES	
15	OHT-STRUCTURES	1		M.S/COMPOSITE	
14	WATER TANK 2000 LITRES	1		HDPE	
13	DUST BIN	2		MILD STEEL	
12	DIRECTION BOARD	2		M.S/COMPOSITE	
11	S.S RAILINGS FOR PC	-		AISI304	
10	M.S.PARTITION WITH COMPOSITE PANEL	1		MILD STEEL	
9	M.S. CHANNEL PARTITION	2		MILD STEEL	
8	PARTITION FRAME FOR PC (CANOPY)	-		AISI304/COMPOSITE	
7	PARTITION FRAME FRONT (CANOPY)	1		AISI304/COMPOSITE	
6	WASH BASIN WITH SOAP DISPENSOR	2		COMPOSITE/SSBASIN	
5	SOLAR POWERED STREET LIGHT	1		-	
4	SOLAR PANEL WITH LED LIGHT	4		-	
3	MEN MODULAR ROW TOILET STALL	1		COMPOSITE	
2	WOMEN MODULAR ROW TOILET STALL	1		COMPOSITE	
1	P.C. MODULAR TOILET STALL	-		COMPOSITE	

SUPERSEDED BY:	DRN	R.MAHENDRAN.
SUPERSEDES:	CHD	N.MASTAN
	APD	R K M

DRAWING NAME

NAMMA TOILET

1 REG MEN + 1 REG WOMEN + 1URINAL

DRAWING NUMBER

NT-UI-002

COMMISSIONERATE OF MUNICIPAL ADMINISTRATION,
CHEPAUK CHENNAI - 600005

SCALE 0.02

SHEET OF A3

ALT

A3

DRAWING NUMBER	REGULAR MODEL
NT-UI-003	WOMEN 1 - MEN 1 URINAL 2
ALT	

ALT.No,	ALTERATION	DATE

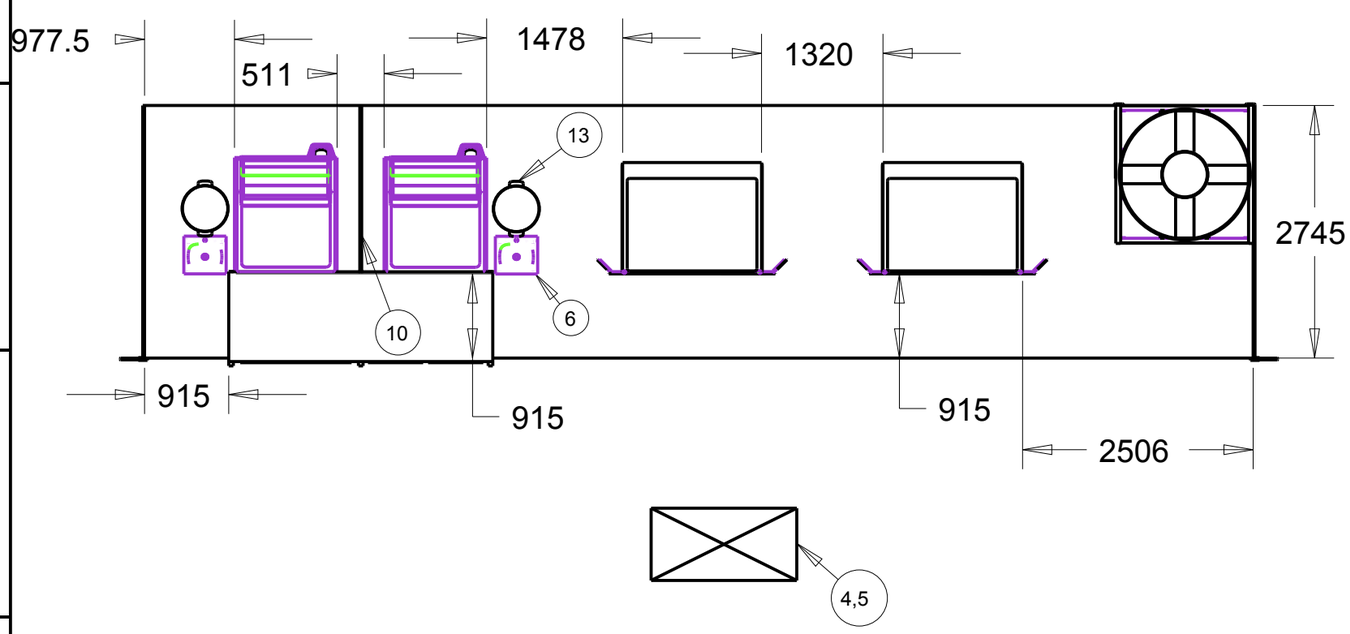

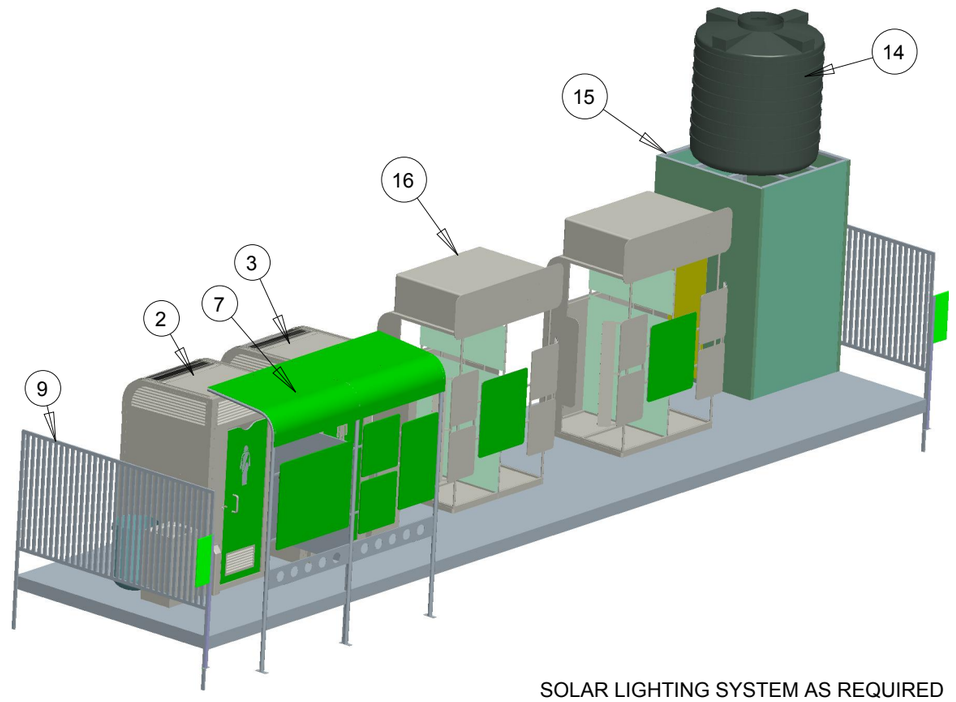

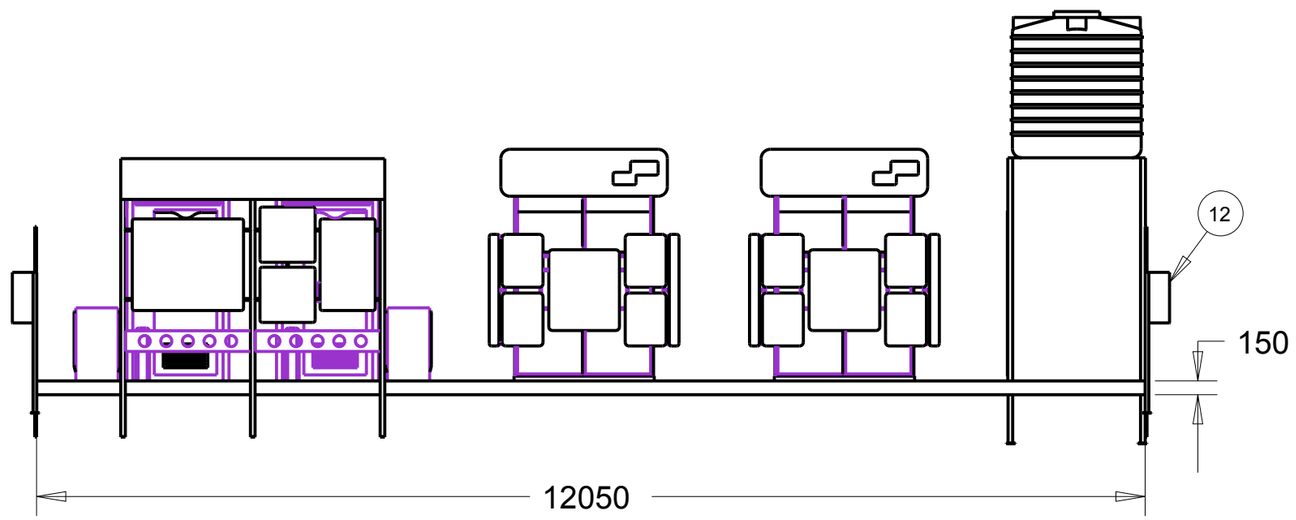

SOLAR LIGHTING SYSTEM AS REQUIRED

SLNO	DESCRIPTION & DIMENSIONS	QTY	REF.DRG	MAT.&SPEC.	WEIGHT/UNIT
16	URINAL	2		AISI304/COMPOSITES	
15	OHT-STRUCTURES	1		M.S/COMPOSITE	
14	WATER TANK 2000 LITRES	1		HDPE	
13	DUST BIN	2		MILD STEEL	
12	DIRECTION BOARD	2		M.S/COMPOSITE	
11	S.S RAILINGS FOR PC	-		AISI304	
10	M.S.PARTITION WITH COMPOSITE PANEL	1		MILD STEEL	
9	M.S. CHANNEL PARTITION	2		MILD STEEL	
8	PARTITION FRAME FOR PC (CANOPY)	-		AISI304/COMPOSITE	
7	PARTITION FRAME FRONT (CANOPY)	1		AISI304/COMPOSITE	
6	WASH BASIN WITH SOAP DISPENSOR	2		COMPOSITE/SSBASIN	
5	SOLAR POWERED STREET LIGHT	1		-	
4	SOLAR PANEL WITH LED LIGHT	6		-	
3	MEN MODULAR ROW TOILET STALL	1		COMPOSITE	
2	WOMEN MODULAR ROW TOILET STALL	1		COMPOSITE	
1	P.C. MODULAR TOILET STALL	-		COMPOSITE	

SUPERSEDED BY:		DRN	R.MAHENDRAN.
SUPERSEDES:		CHD	N.MASTAN
DRAWING NAME	NAMMA TOILET 1 REG MEN + 1 REG WOMEN + 2URINAL	APD	R K M
		DRAWING NUMBER	NT-UI-003
COMMISSIONERATE OF MUNICIPAL ADMINISTRATION, CHEPAUK CHENNAI - 600005		SCALE 0.015	
		SHEET OF	A3
		ALT	

A3

DRAWING NUMBER	PRESANT MODEL
NT-UI-004	1 PC 2 REG MEN
ALT	

ALT.No,	ALTERATION	DATE

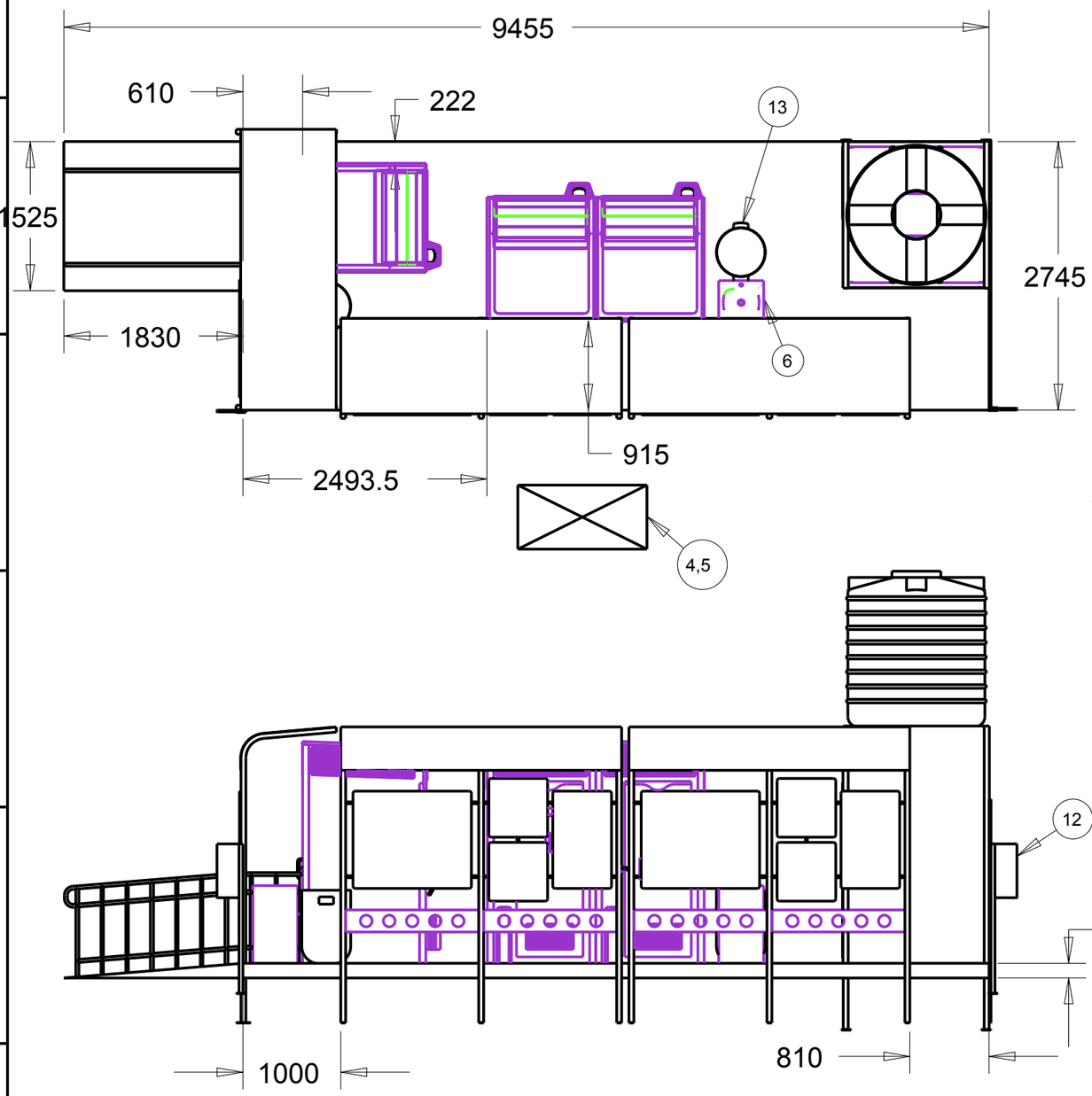

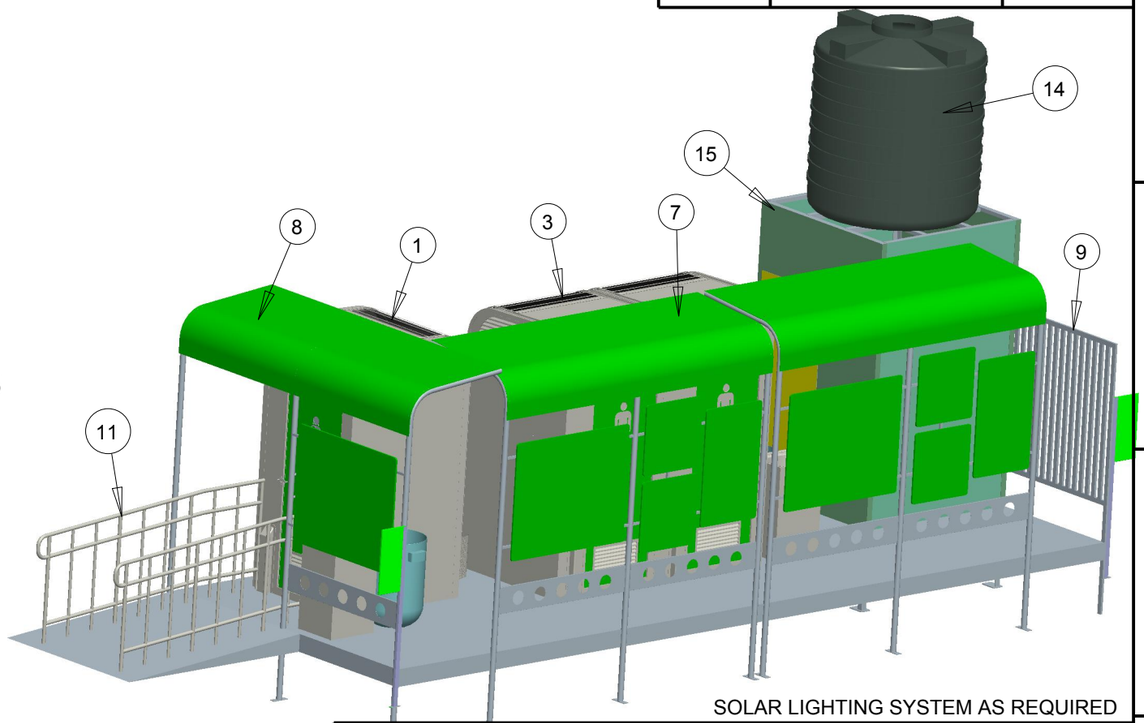

SOLAR LIGHTING SYSTEM AS REQUIRED

SLNO.	DESCRIPTION & DIMENSIONS	QTY	REF.DRG.	MAT.&SPEC.	WEIGHT/UNIT
16	URINAL	-		AISI304/COMPOSITES	
15	OHT-STRUCTURES	1		M.S/COMPOSITE	
14	WATER TANK 2000 LITRES	1		HDPE	
13	DUST BIN	2		MILD STEEL	
12	DIRECTION BOARD	2		M.S/COMPOSITE	
11	S.S RAILINGS FOR PC	2		AISI304	
10	M.S.PARTITION WITH COMPOSITE PANEL	-		MILD STEEL	
9	M.S. CHANNEL PARTITION	1		MILD STEEL	
8	PARTITION FRAME FOR PC (CANOPY)	1		AISI304/COMPOSITE	
7	PARTITION FRAME FRONT (CANOPY)	2		AISI304/COMPOSITE	
6	WASH BASIN WITH SOAP DISPENSOR	2		COMPOSITE/SSBASIN	
5	SOLAR POWERED STREET LIGHT	1		-	
4	SOLAR PANEL WITH LED LIGHT	3		-	
3	MEN MODULAR ROW TOILET STALL	2		COMPOSITE	
2	WOMEN MODULAR ROW TOILET STALL	-		COMPOSITE	
1	P.C. MODULAR TOILET STALL	1		COMPOSITE	

SUPERSEDED BY:		DRN	R.MAHENDRAN.
SUPERSEDES:		CHD	N.MASTAN
DRAWING NAME	NAMMA TOILET 1 PC + 2 REG MEN	APD	R K M
		DRAWING NUMBER	NT-UI-004
COMMISSIONERATE OF MUNICIPAL ADMINISTRATION, CHEPAUK CHENNAI - 600005		SCALE	0.018
		SHEET OF	A3
		ALT	

A3

DRAWING NUMBER

NT-UI-005

ALT

PRESANT MODEL

1 PC
2 REG WOMEN

ALT.No,	ALTERATION	DATE

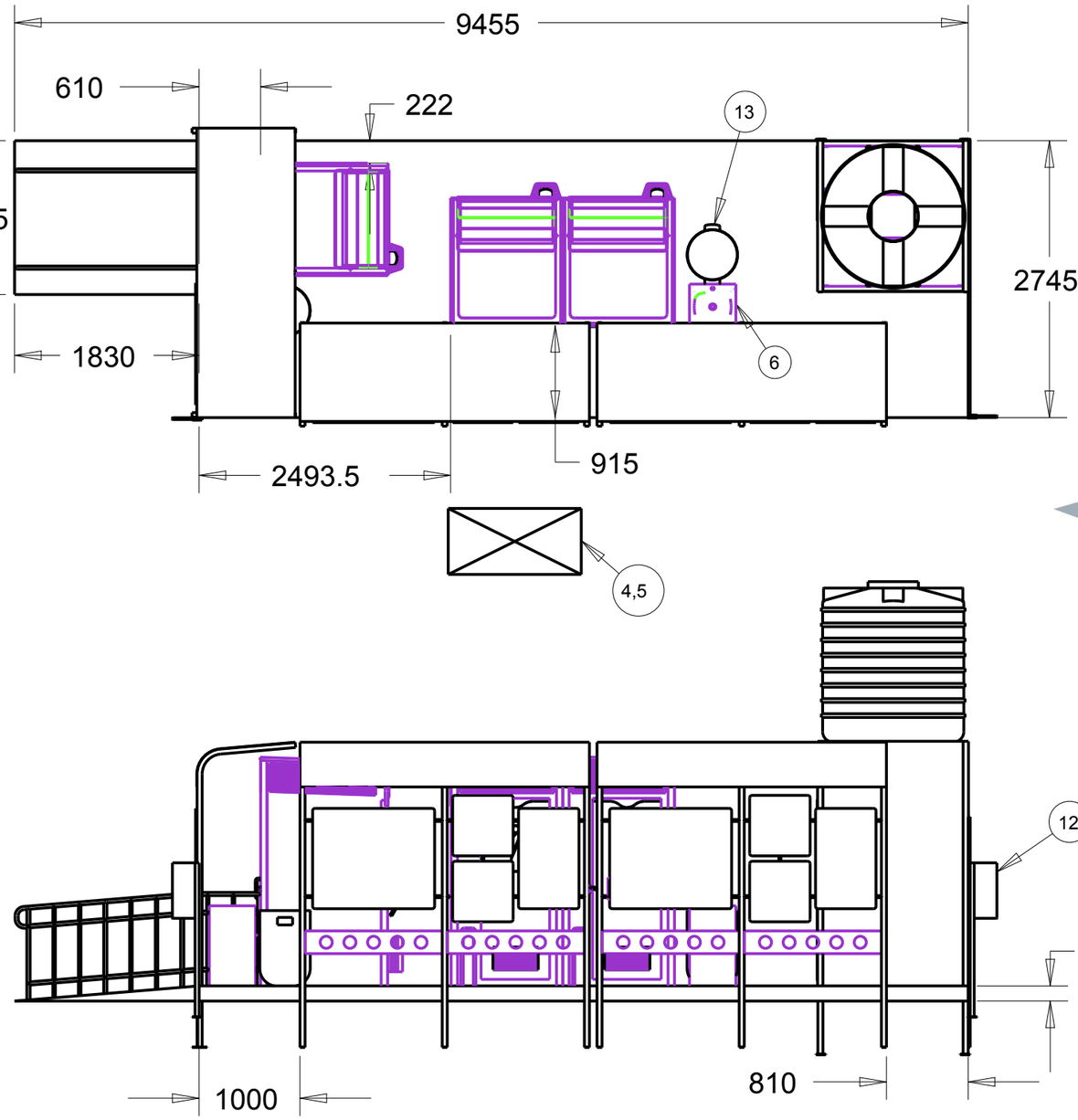

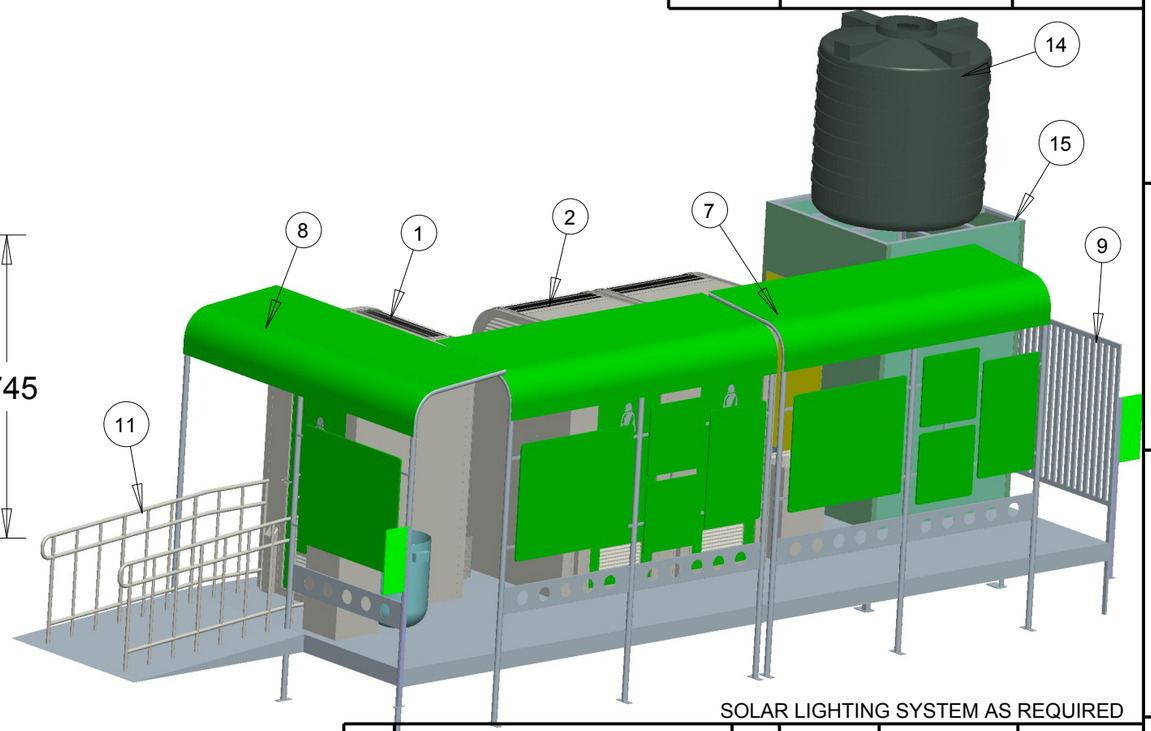

SOLAR LIGHTING SYSTEM AS REQUIRED

SLNO	DESCRIPTION & DIMENSIONS	QTY	REF.DRG	MAT.&SPEC.	WEIGHT/UNIT
16	URINAL	-		AISI304/COMPOSITES	
15	OHT-STRUCTURES	1		M.S/COMPOSITE	
14	WATER TANK 2000 LITRES	1		HDPE	
13	DUST BIN	2		MILD STEEL	
12	DIRECTION BOARD	2		M.S/COMPOSITE	
11	S.S RAILINGS FOR PC	2		AISI304	
10	M.S.PARTITION WITH COMPOSITE PANEL	-		MILD STEEL	
9	M.S. CHANNEL PARTITION	1		MILD STEEL	
8	PARTITION FRAME FOR PC (CANOPY)	1		AISI304/COMPOSITE	
7	PARTITION FRAME FRONT (CANOPY)	2		AISI304/COMPOSITE	
6	WASH BASIN WITH SOAP DISPENSOR	2		COMPOSITE/SSBASIN	
5	SOLAR POWERED STREET LIGHT	1		-	
4	SOLAR PANEL WITH LED LIGHT	3		-	
3	MEN MODULAR ROW TOILET STALL	-		COMPOSITE	
2	WOMEN MODULAR ROW TOILET STALL	2		COMPOSITE	
1	P.C. MODULAR TOILET STALL	1		COMPOSITE	

SUPERSEDED BY:

SUPERSEDES:

DRN	R.MAHENDRAN.
CHD	N.MASTAN
APD	R K M

DRAWING NAME

NAMMA TOILET

1 PC + 2 REG WOMEN

DRAWING NUMBER

NT-UI-005

COMMISSIONERATE OF MUNICIPAL ADMINISTRATION,
CHEPAUK CHENNAI - 600005

SCALE 0.018

SHEET OF A3

ALT

A3

DRAWING NUMBER	PRESANT MODEL
NT-UI-006	1 PC 3 REG MEN
ALT	

ALT.No,	ALTERATION	DATE

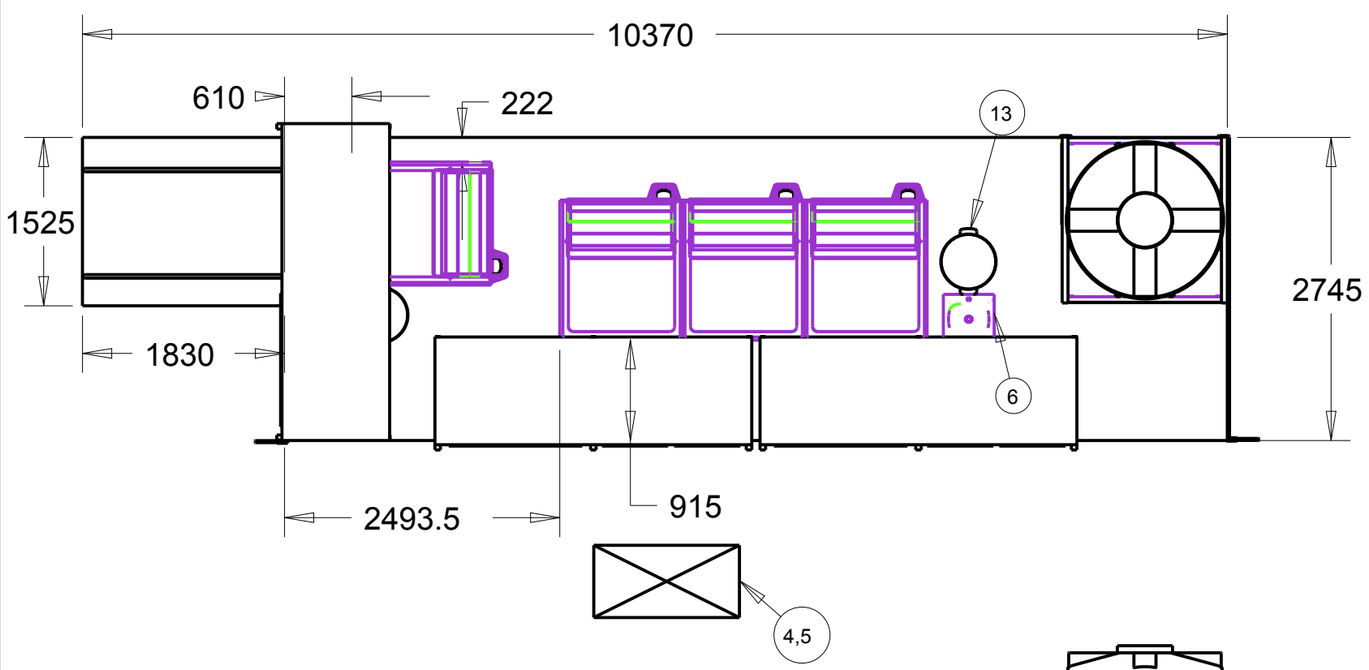

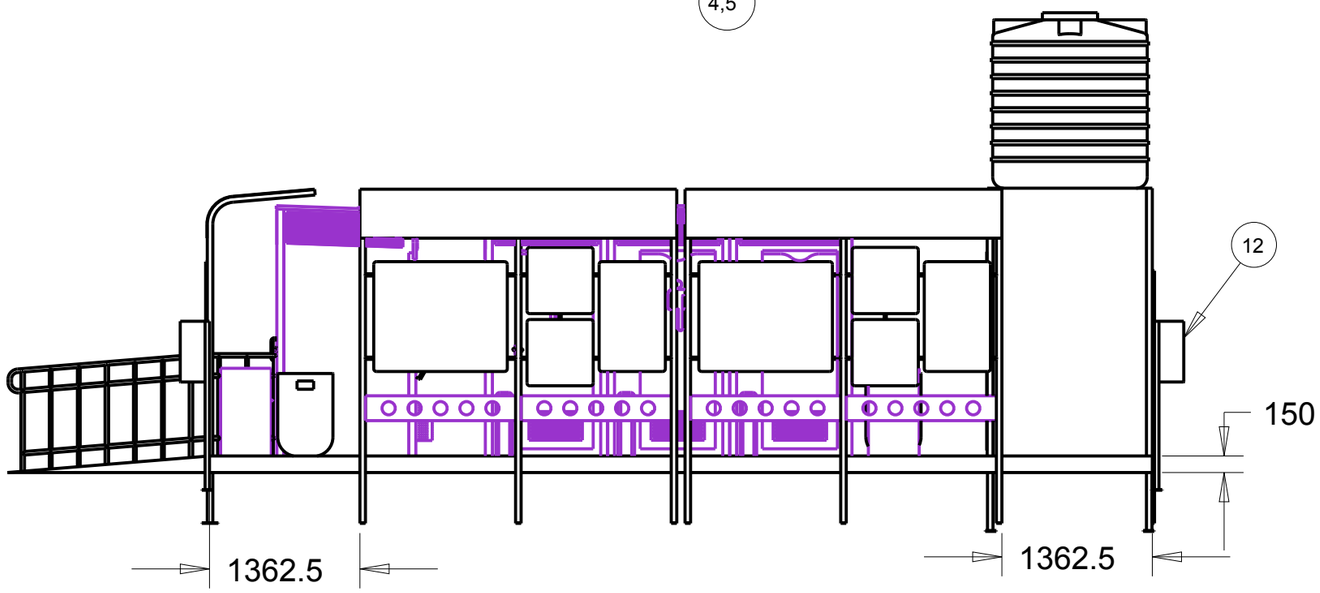

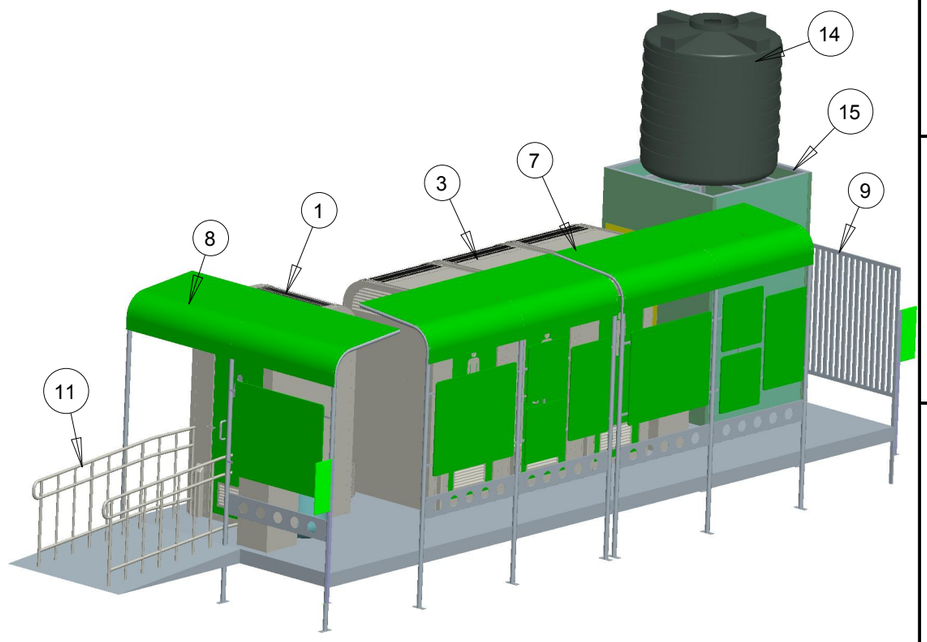

SOLAR LIGHTING SYSTEM AS REQUIRED

SLNO	DESCRIPTION & DIMENSIONS	QTY	REF.DRG	MAT.&SPEC.	WEIGHT/UNIT
16	URINAL	-		AISI304/COMPOSITES	
15	OHT-STRUCTURES	1		M.S/COMPOSITE	
14	WATER TANK 2000 LITRES	1		HDPE	
13	DUST BIN	2		MILD STEEL	
12	DIRECTION BOARD	2		M.S/COMPOSITE	
11	S.S RAILINGS FOR PC	2		AISI304	
10	M.S.PARTITION WITH COMPOSITE PANEL	-		MILD STEEL	
9	M.S. CHANNEL PARTITION	1		MILD STEEL	
8	PARTITION FRAME FOR PC (CANOPY)	1		AISI304/COMPOSITE	
7	PARTITION FRAME FRONT (CANOPY)	2		AISI304/COMPOSITE	
6	WASH BASIN WITH SOAP DISPENSOR	2		COMPOSITE/SSBASIN	
5	SOLAR POWERED STREET LIGHT	1		-	
4	SOLAR PANEL WITH LED LIGHT	4		-	
3	MEN MODULAR ROW TOILET STALL	3		COMPOSITE	
2	WOMEN MODULAR ROW TOILET STALL	-		COMPOSITE	
1	P.C. MODULAR TOILET STALL	1		COMPOSITE	

SUPERSEDED BY:	DRN	R.MAHENDRAN.
SUPERSEDES:	CHD	N.MASTAN
	APD	R K M

DRAWING NAME

NAMMA TOILET

1 PC + 3 REG MEN

DRAWING NUMBER

NT-UI-006

COMMISSIONERATE OF MUNICIPAL ADMINISTRATION,
CHEPAUK CHENNAI - 600005

SCALE 0.018

SHEET OF A3

ALT

A3

DRAWING NUMBER	PRESANT MODEL
NT-UI-007	1 PC 3 REG WOMEN
ALT	

ALT.No,	ALTERATION	DATE

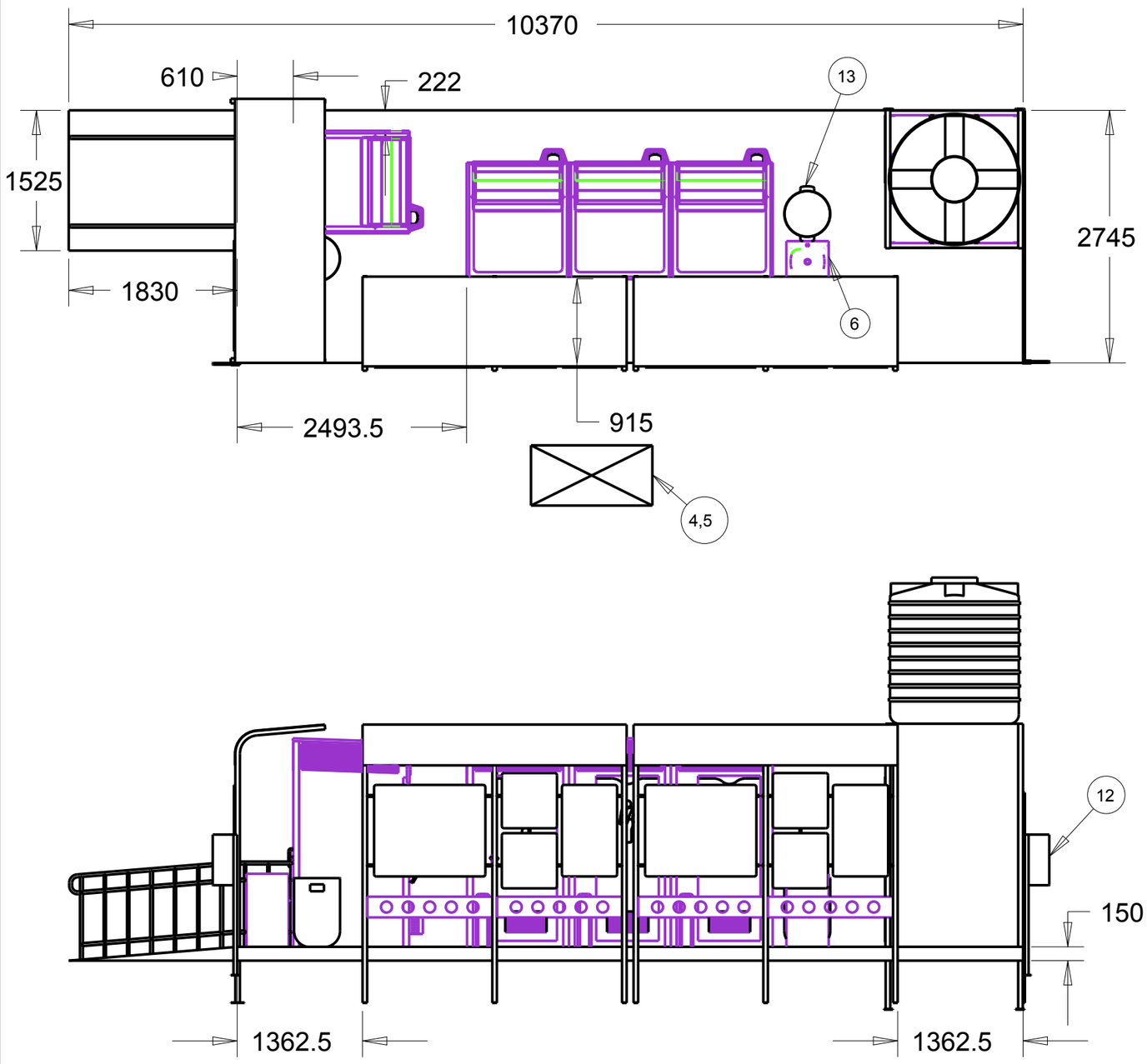

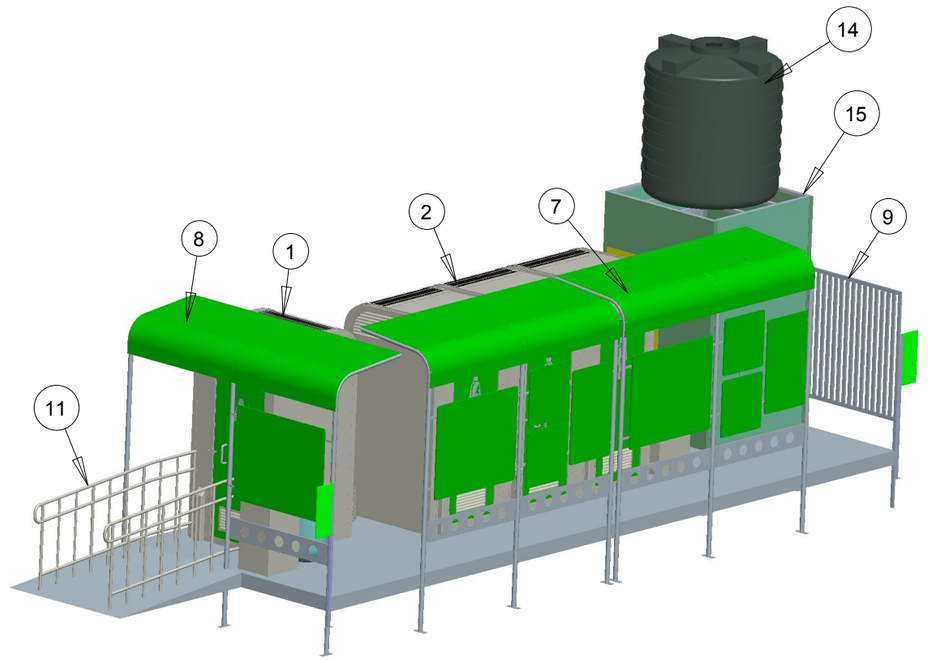

SOLAR LIGHTING SYSTEM AS REQUIRED

SLNO.	DESCRIPTION & DIMENSIONS	QTY	REF.DRG.	MAT.&SPEC.	WEIGHT/UNIT
16	URINAL	-		AISI304/COMPOSITES	
15	OHT-STRUCTURES	1		M.S/COMPOSITE	
14	WATER TANK 2000 LITRES	1		HDPE	
13	DUST BIN	2		MILD STEEL	
12	DIRECTION BOARD	2		M.S/COMPOSITE	
11	S.S RAILINGS FOR PC	2		AISI304	
10	M.S.PARTITION WITH COMPOSITE PANEL	-		MILD STEEL	
9	M.S. CHANNEL PARTITION	1		MILD STEEL	
8	PARTITION FRAME FOR PC (CANOPY)	1		AISI304/COMPOSITE	
7	PARTITION FRAME FRONT (CANOPY)	2		AISI304/COMPOSITE	
6	WASH BASIN WITH SOAP DISPENSOR	2		COMPOSITE/SSBASIN	
5	SOLAR POWERED STREET LIGHT	1		-	
4	SOLAR PANEL WITH LED LIGHT	4		-	
3	MEN MODULAR ROW TOILET STALL	-		COMPOSITE	
2	WOMEN MODULAR ROW TOILET STALL	3		COMPOSITE	
1	P.C. MODULAR TOILET STALL	1		COMPOSITE	

SUPERSEDED BY:	DRN	R.MAHENDRAN.
SUPERSEDES:	CHD	N.MASTAN
	APD	R K M

DRAWING NAME

NAMMA TOILET

1 PC + 3 REG WOMEN

DRAWING NUMBER

NT-UI-007

COMMISSIONERATE OF MUNICIPAL ADMINISTRATION,
CHEPAUK CHENNAI - 600005

SCALE 0.018

SHEET OF A3

ALT

A3

DRAWING NUMBER	PRESANT MODEL
NT-UI-008	1 PC 4 REG MEN
ALT	

ALT.No,	ALTERATION	DATE

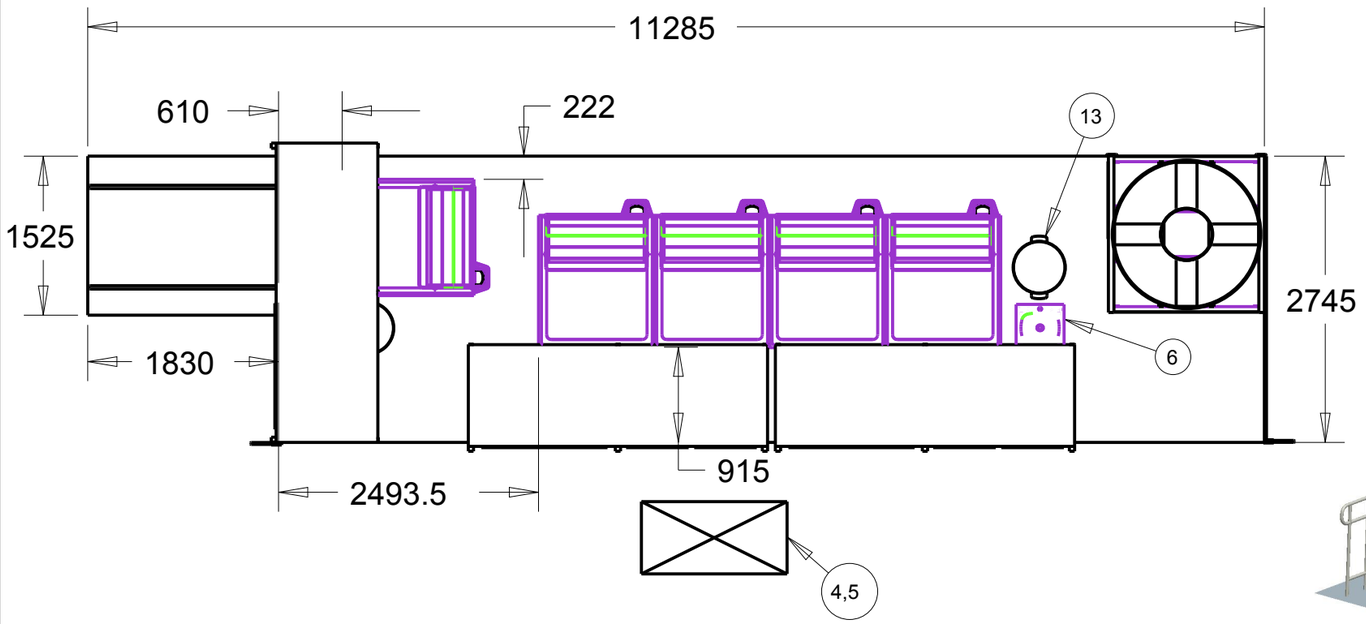

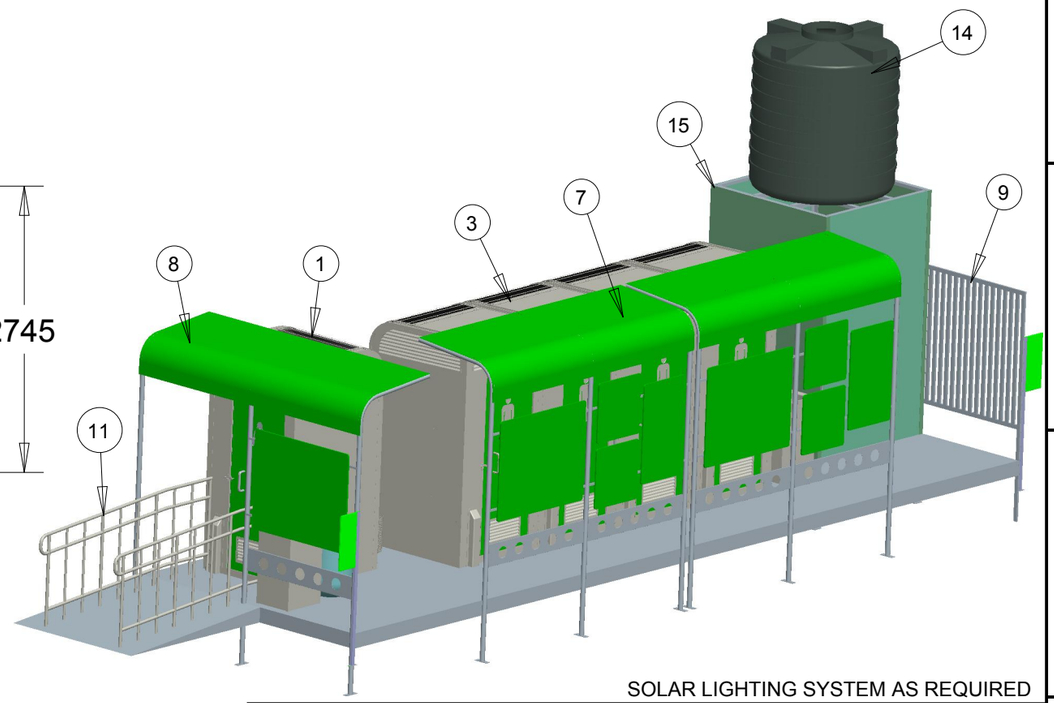

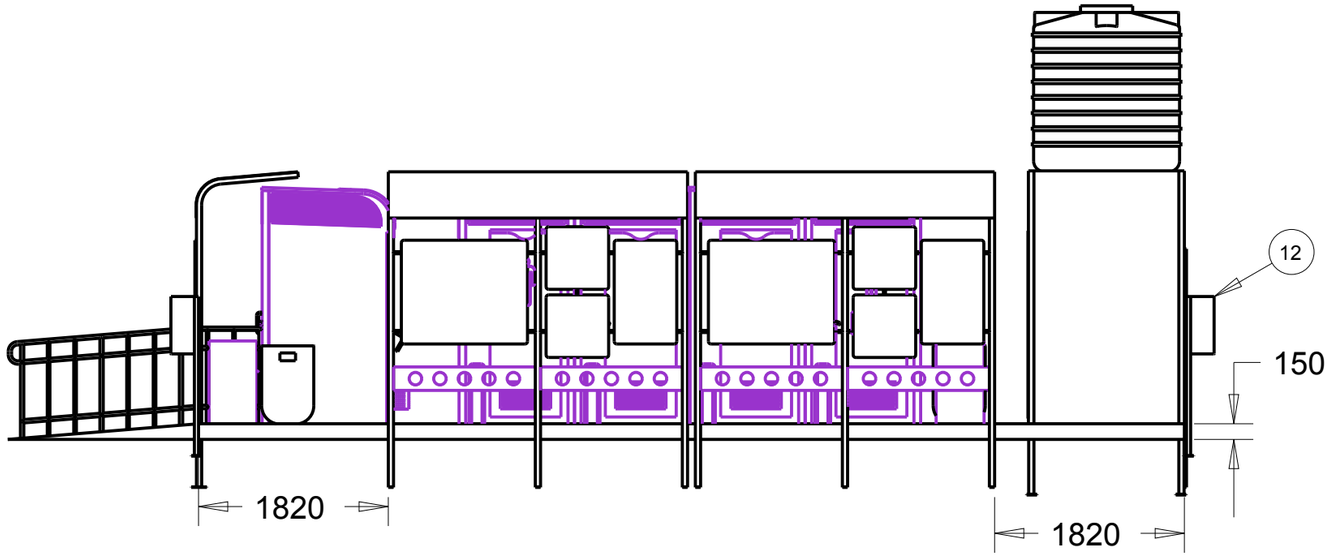

SOLAR LIGHTING SYSTEM AS REQUIRED

SLNO.	DESCRIPTION & DIMENSIONS	QTY	REF.DRG.	MAT.&SPEC.	WEIGHT/UNIT
16	URINAL	-		AISI304/COMPOSITES	
15	OHT-STRUCTURES	1		M.S/COMPOSITE	
14	WATER TANK 2000 LITRES	1		HDPE	
13	DUST BIN	2		MILD STEEL	
12	DIRECTION BOARD	2		M.S/COMPOSITE	
11	S.S RAILINGS FOR PC	2		AISI304	
10	M.S.PARTITION WITH COMPOSITE PANEL	-		MILD STEEL	
9	M.S. CHANNEL PARTITION	1		MILD STEEL	
8	PARTITION FRAME FOR PC (CANOPY)	1		AISI304/COMPOSITE	
7	PARTITION FRAME FRONT (CANOPY)	2		AISI304/COMPOSITE	
6	WASH BASIN WITH SOAP DISPENSOR	2		COMPOSITE/SSBASIN	
5	SOLAR POWERED STREET LIGHT	2		-	
4	SOLAR PANEL WITH LED LIGHT	5		-	
3	MEN MODULAR ROW TOILET STALL	4		COMPOSITE	
2	WOMEN MODULAR ROW TOILET STALL	-		COMPOSITE	
1	P.C. MODULAR TOILET STALL	1		COMPOSITE	

SUPERSEDED BY:		DRN	R.MAHENDRAN.
SUPERSEDES:		CHD	N.MASTAN
		APD	R K M

DRAWING NAME

NAMMA TOILET

1 PC + 4 REG MEN

DRAWING NUMBER

NT-UI-008

COMMISSIONERATE OF MUNICIPAL ADMINISTRATION,
CHEPAUK CHENNAI - 600005

SCALE 0.017

SHEET OF A3

ALT

A3

DRAWING NUMBER	PRESANT MODEL
NT-UI-009	1 PC 4 REG WOMEN
ALT	

ALT.No,	ALTERATION	DATE

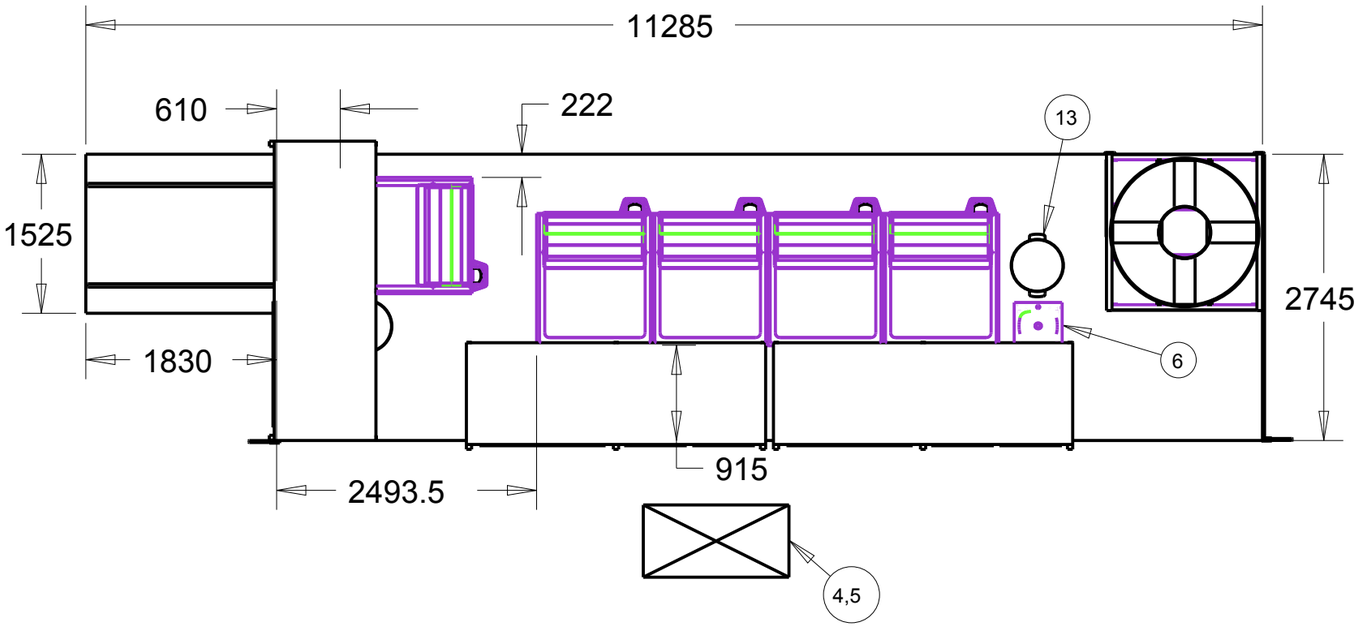

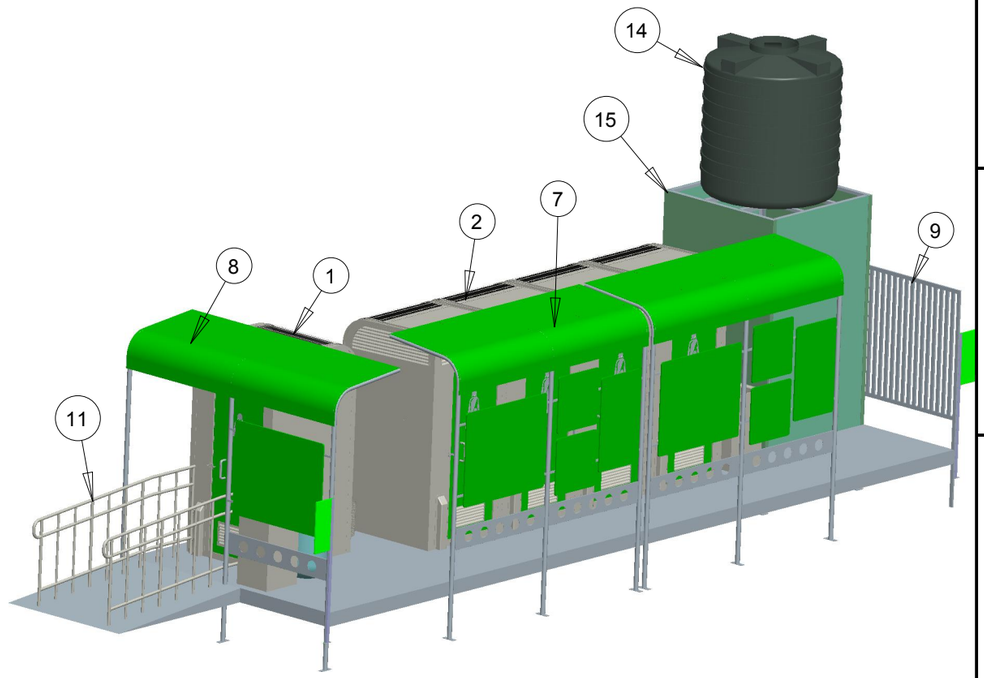

SOLAR LIGHTING SYSTEM AS REQUIRED

SLNO.	DESCRIPTION & DIMENSIONS	QTY	REF.DRG.	MAT.&SPEC.	WEIGHT/UNIT
16	URINAL	-		AISI304/COMPOSITES	
15	OHT-STRUCTURES	1		M.S/COMPOSITE	
14	WATER TANK 2000 LITRES	1		HDPE	
13	DUST BIN	2		MILD STEEL	
12	DIRECTION BOARD	2		M.S/COMPOSITE	
11	S.S RAILINGS FOR PC	2		AISI304	
10	M.S.PARTITION WITH COMPOSITE PANEL	-		MILD STEEL	
9	M.S. CHANNEL PARTITION	1		MILD STEEL	
8	PARTITION FRAME FOR PC (CANOPY)	1		AISI304/COMPOSITE	
7	PARTITION FRAME FRONT (CANOPY)	2		AISI304/COMPOSITE	
6	WASH BASIN WITH SOAP DISPENSOR	2		COMPOSITE/SSBASIN	
5	SOLAR POWERED STREET LIGHT	2		-	
4	SOLAR PANEL WITH LED LIGHT	5		-	
3	MEN MODULAR ROW TOILET STALL	-		COMPOSITE	
2	WOMEN MODULAR ROW TOILET STALL	4		COMPOSITE	
1	P.C. MODULAR TOILET STALL	1		COMPOSITE	

SUPERSEDED BY:	DRN	R.MAHENDRAN.
SUPERSEDES:	CHD	N.MASTAN
	APD	R K M

DRAWING NAME

NAMMA TOILET

1 PC + 4 REG WOMEN

DRAWING NUMBER

NT-UI-009

COMMISSIONERATE OF MUNICIPAL ADMINISTRATION,
CHEPAUK CHENNAI - 600005

SCALE 0.017

SHEET OF A3

ALT

A3

DRAWING NUMBER	PRESANT MODEL
NT-UI-010	1 PC 5 REG MEN
ALT	

ALT.No,	ALTERATION	DATE

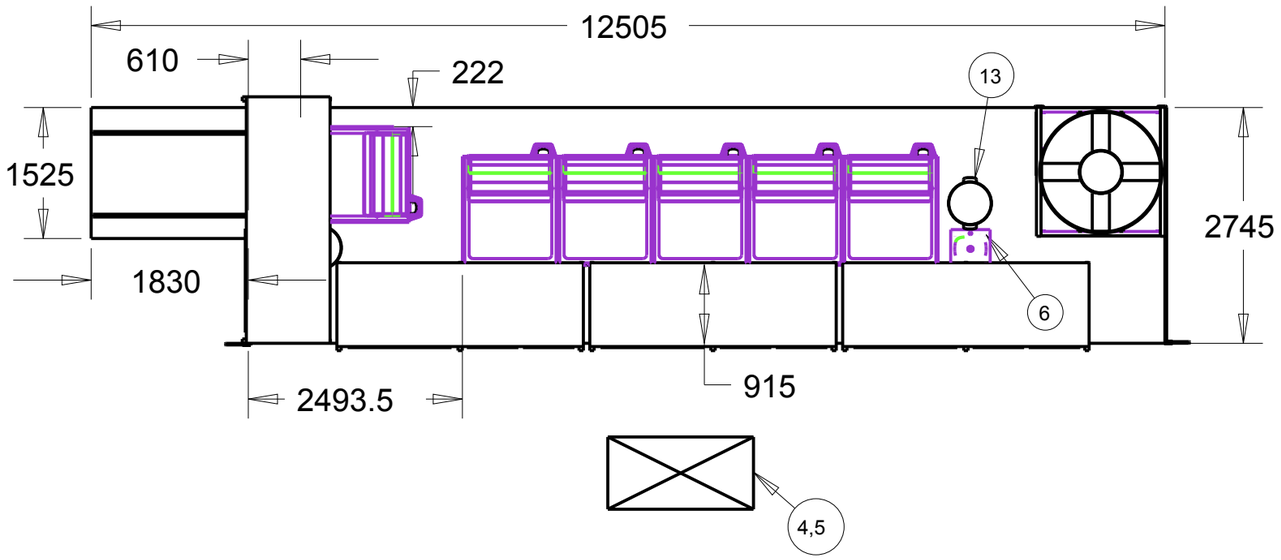

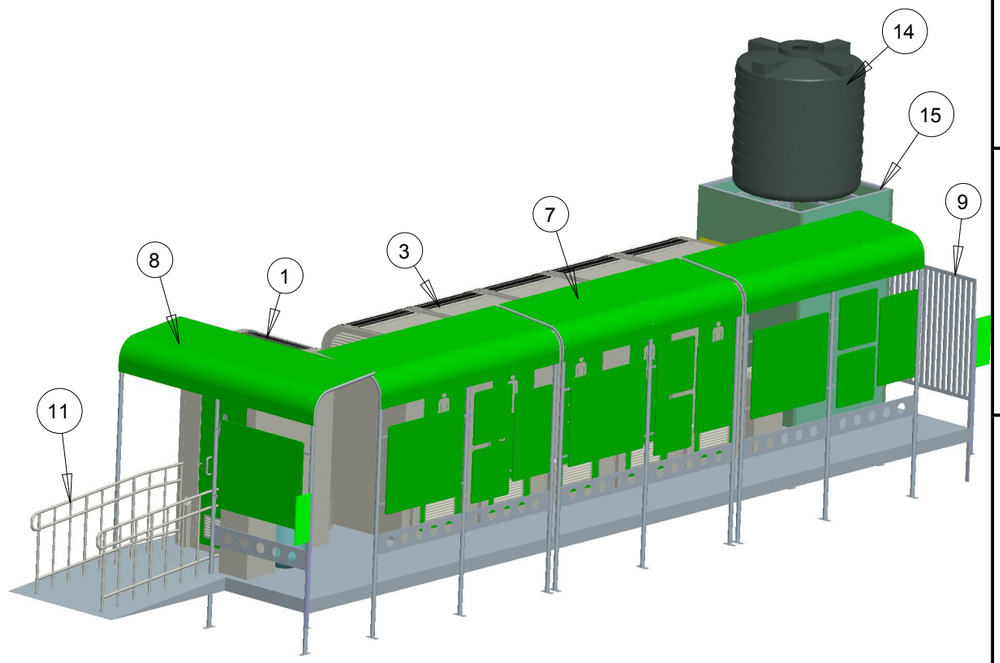

SOLAR LIGHTING SYSTEM AS REQUIRED

SLNO.	DESCRIPTION & DIMENSIONS	QTY	REF.DRG.	MAT.&SPEC.	WEIGHT/UNIT
16	URINAL	-		AISI304/COMPOSITES	
15	OHT-STRUCTURES	1		M.S/COMPOSITE	
14	WATER TANK 2000 LITRES	1		HDPE	
13	DUST BIN	2		MILD STEEL	
12	DIRECTION BOARD	2		M.S/COMPOSITE	
11	S.S RAILINGS FOR PC	2		AISI304	
10	M.S.PARTITION WITH COMPOSITE PANEL	-		MILD STEEL	
9	M.S. CHANNEL PARTITION	1		MILD STEEL	
8	PARTITION FRAME FOR PC (CANOPY)	1		AISI304/COMPOSITE	
7	PARTITION FRAME FRONT (CANOPY)	3		AISI304/COMPOSITE	
6	WASH BASIN WITH SOAP DISPENSOR	2		COMPOSITE/SSBASIN	
5	SOLAR POWERED STREET LIGHT	2		-	
4	SOLAR PANEL WITH LED LIGHT	6		-	
3	MEN MODULAR ROW TOILET STALL	5		COMPOSITE	
2	WOMEN MODULAR ROW TOILET STALL	-		COMPOSITE	
1	P.C. MODULAR TOILET STALL	1		COMPOSITE	

SUPERSEDED BY:		DRN	R.MAHENDRAN.
SUPERSEDES:		CHD	N.MASTAN
DRAWING NAME	NAMMA TOILET 1 PC + 5 REG MEN	APD	R K M
		DRAWING NUMBER	NT-UI-010
COMMISSIONERATE OF MUNICIPAL ADMINISTRATION, CHEPAUK CHENNAI - 600005		SCALE	0.014
		SHEET OF	A3
		ALT	

A3

DRAWING NUMBER	PRESANT MODEL
NT-UI-011	1 PC 5 REG WOMEN
ALT	

ALT.No,	ALTERATION	DATE

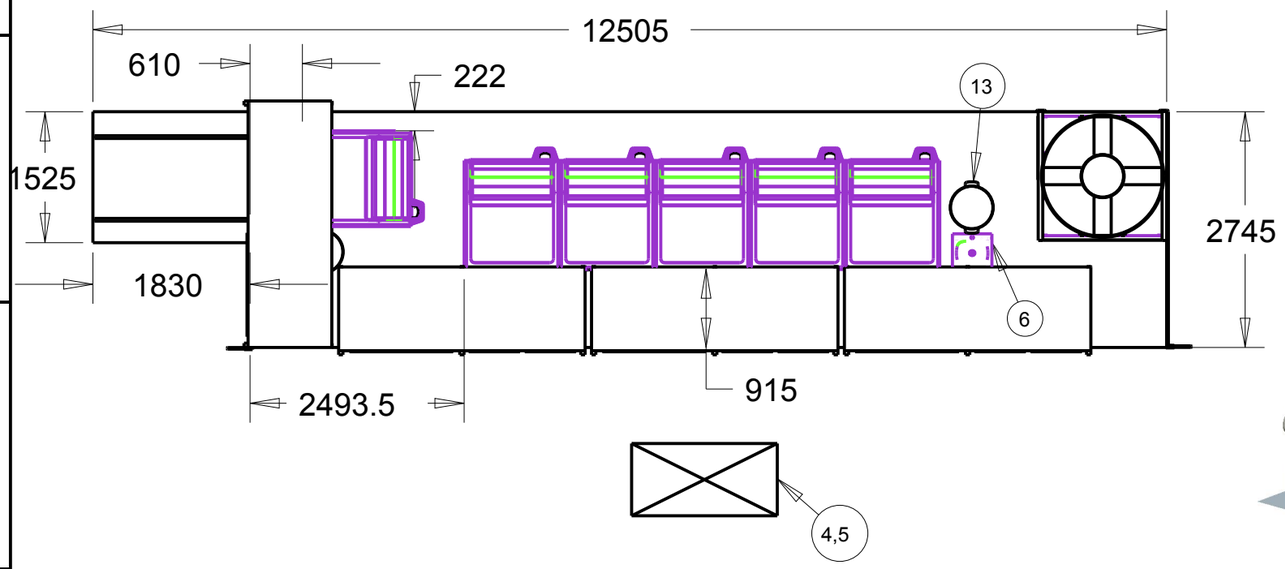

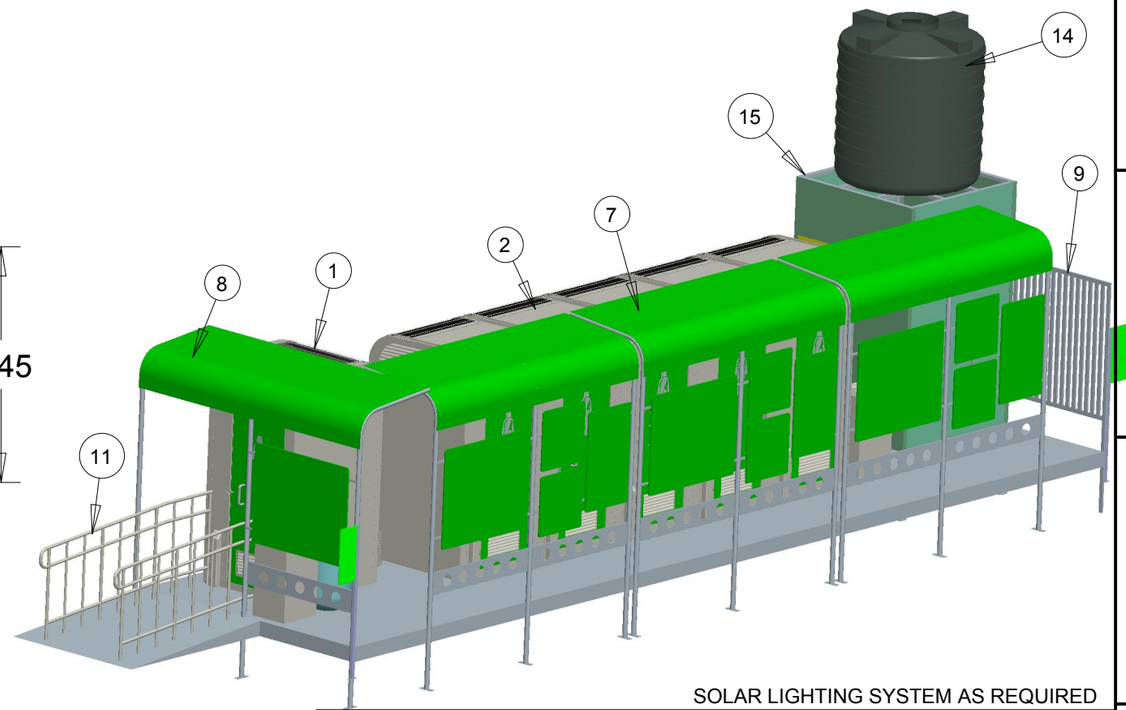

SOLAR LIGHTING SYSTEM AS REQUIRED

SLNO.	DESCRIPTION & DIMENSIONS	QTY	REF.DRG.	MAT.&SPEC.	WEIGHT/UNIT
16	URINAL	-		AISI304/COMPOSITES	
15	OHT-STRUCTURES	1		M.S/COMPOSITE	
14	WATER TANK 2000 LITRES	1		HDPE	
13	DUST BIN	2		MILD STEEL	
12	DIRECTION BOARD	2		M.S/COMPOSITE	
11	S.S RAILINGS FOR PC	2		AISI304	
10	M.S.PARTITION WITH COMPOSITE PANEL	-		MILD STEEL	
9	M.S. CHANNEL PARTITION	1		MILD STEEL	
8	PARTITION FRAME FOR PC (CANOPY)	1		AISI304/COMPOSITE	
7	PARTITION FRAME FRONT (CANOPY)	3		AISI304/COMPOSITE	
6	WASH BASIN WITH SOAP DISPENSOR	2		COMPOSITE/SSBASIN	
5	SOLAR POWERED STREET LIGHT	2		-	
4	SOLAR PANEL WITH LED LIGHT	6		-	
3	MEN MODULAR ROW TOILET STALL	-		COMPOSITE	
2	WOMEN MODULAR ROW TOILET STALL	5		COMPOSITE	
1	P.C. MODULAR TOILET STALL	1		COMPOSITE	

SUPERSEDED BY:	DRN	R.MAHENDRAN.
SUPERSEDES:	CHD	N.MASTAN
	APD	R K M

DRAWING NAME

NAMMA TOILET

1 PC + 5 REG WOMEN

DRAWING NUMBER

NT-UI-011

COMMISSIONERATE OF MUNICIPAL ADMINISTRATION,
CHEPAUK CHENNAI - 600005

SCALE 0.014

SHEET OF A3

ALT

A3

DRAWING NUMBER
NT-UI-012
ALT

PRESANT MODEL
PC 1
REG WOMEN 2 - REG MEN 2

ALT.No,	ALTERATION	DATE

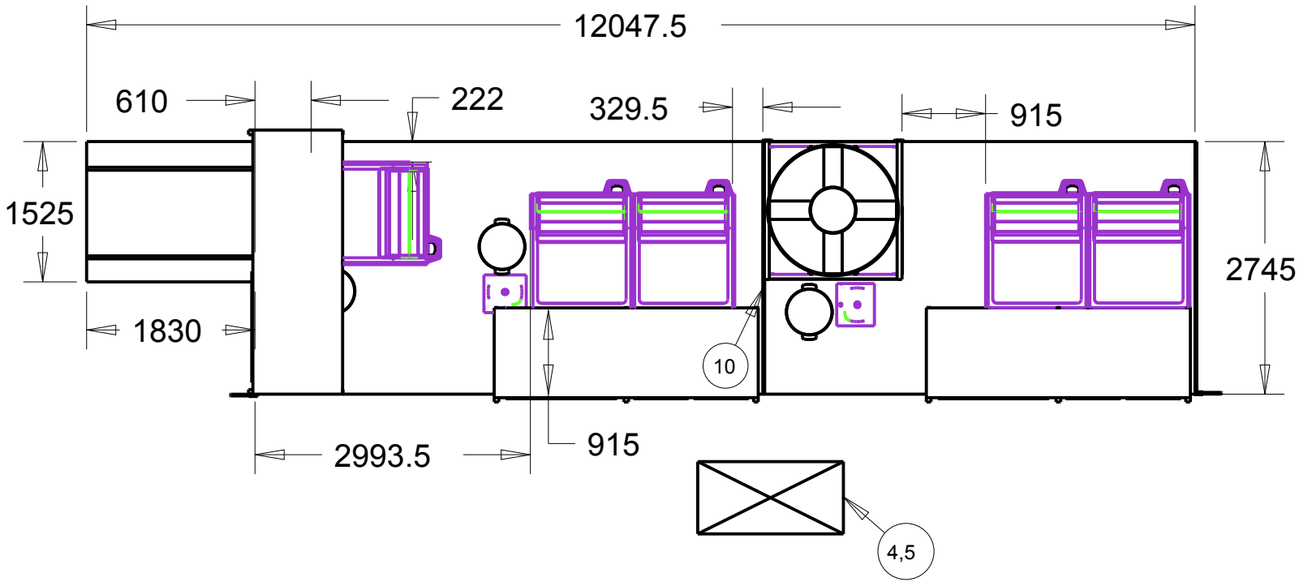

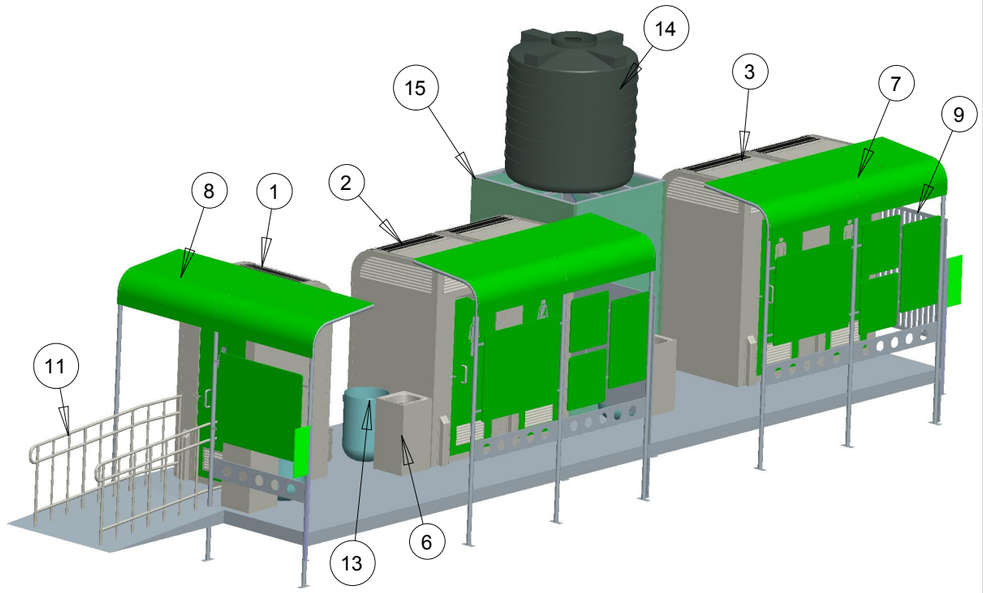

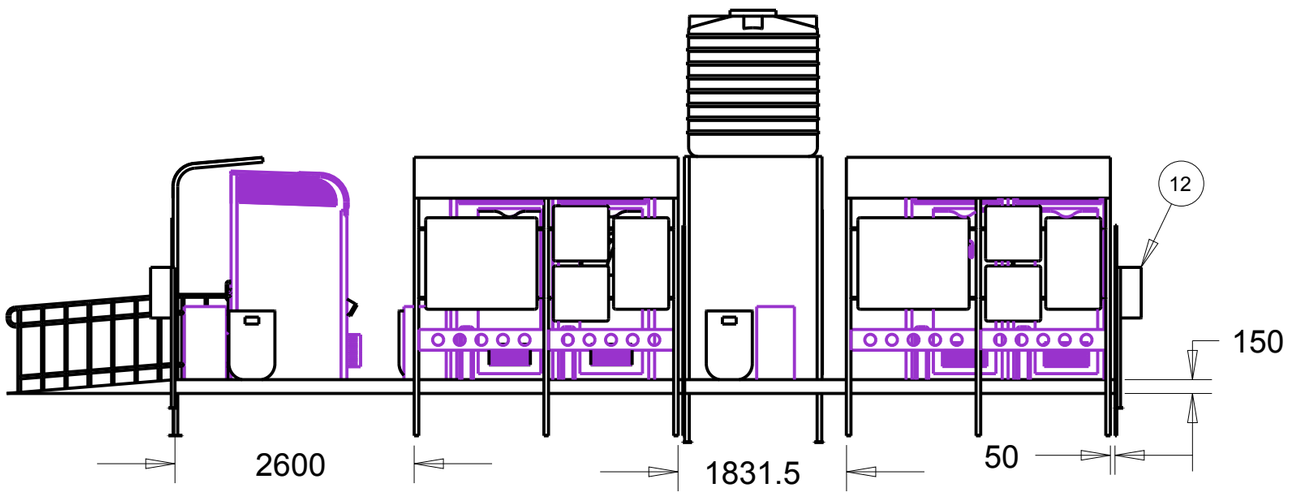

SOLAR LIGHTING SYSTEM AS REQUIRED

SLNO.	DESCRIPTION & DIMENSIONS	QTY	REF.DRG.	MAT.&SPEC.	WEIGHT/UNIT
16	URINAL	-		AISI304/COMPOSITES	
15	OHT-STRUCTURES	1		M.S/COMPOSITE	
14	WATER TANK 2000 LITRES	1		HDPE	
13	DUST BIN	3		MILD STEEL	
12	DIRECTION BOARD	2		M.S/COMPOSITE	
11	S.S RAILINGS FOR PC	2		AISI304	
10	M.S.PARTITION WITH COMPOSITE PANEL	1		MILD STEEL	
9	M.S. CHANNEL PARTITION	1		MILD STEEL	
8	PARTITION FRAME FOR PC (CANOPY)	1		AISI304/COMPOSITE	
7	PARTITION FRAME FRONT (CANOPY)	2		AISI304/COMPOSITE	
6	WASH BASIN WITH SOAP DISPENSOR	3		COMPOSITE/SSBASIN	
5	SOLAR POWERED STREET LIGHT	2		-	
4	SOLAR PANEL WITH LED LIGHT	5		-	
3	MEN MODULAR ROW TOILET STALL	2		COMPOSITE	
2	WOMEN MODULAR ROW TOILET STALL	2		COMPOSITE	
1	P.C. MODULAR TOILET STALL	1		COMPOSITE	

SUPERSEDED BY:
SUPERSEDES:

DRN R.MAHENDRAN.
CHD N.MASTAN
APD R K M

DRAWING NAME
NAMMA TOILET
1 PC + 2 REG WOMEN +2 REG MEN

DRAWING NUMBER
NT-UI-012

COMMISSIONERATE OF MUNICIPAL ADMINISTRATION,
CHEPAUK CHENNAI - 600005

SCALE 0.015
SHEET OF A3
ALT

A3

DRAWING NUMBER	PRESANT MODEL
NT-UI-013	PC 1 REG WOMEN 3 - REG MEN 2
ALT	

ALT.No,	ALTERATION	DATE

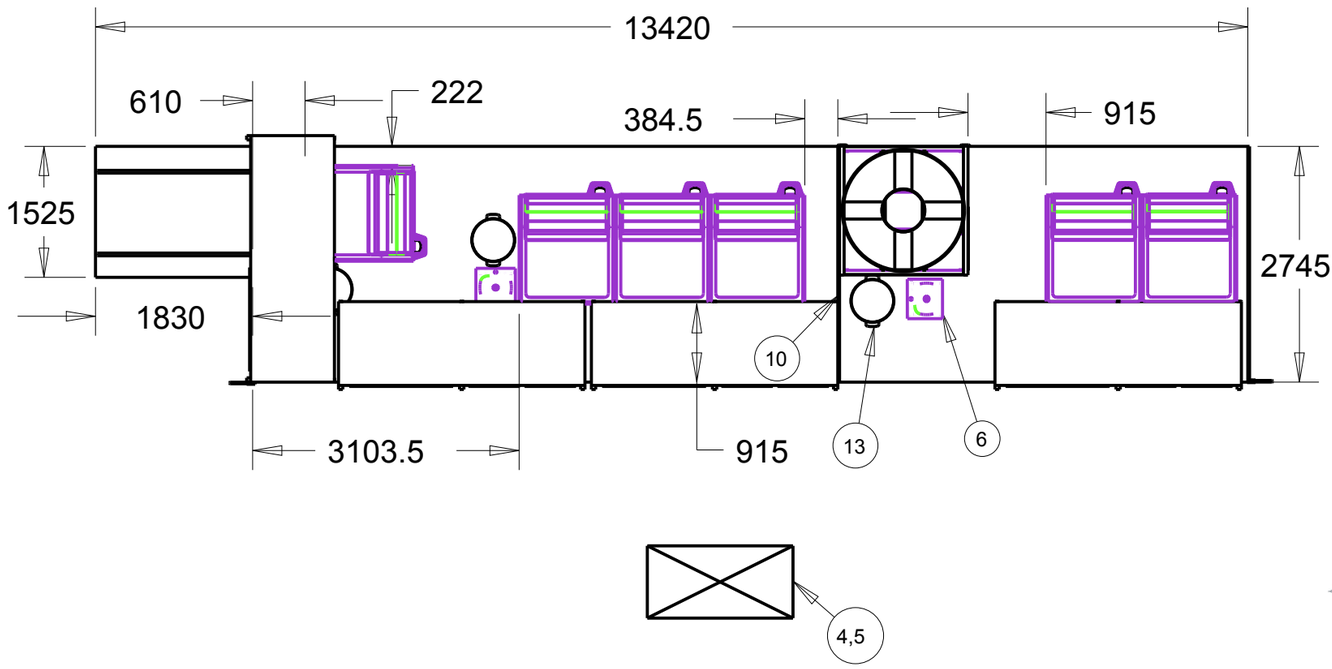

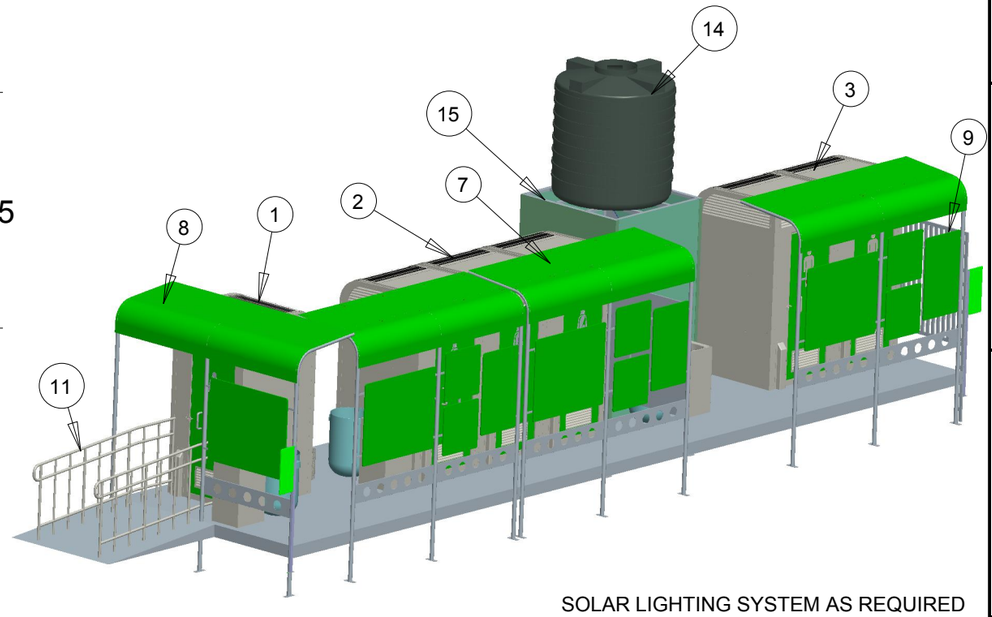

SOLAR LIGHTING SYSTEM AS REQUIRED

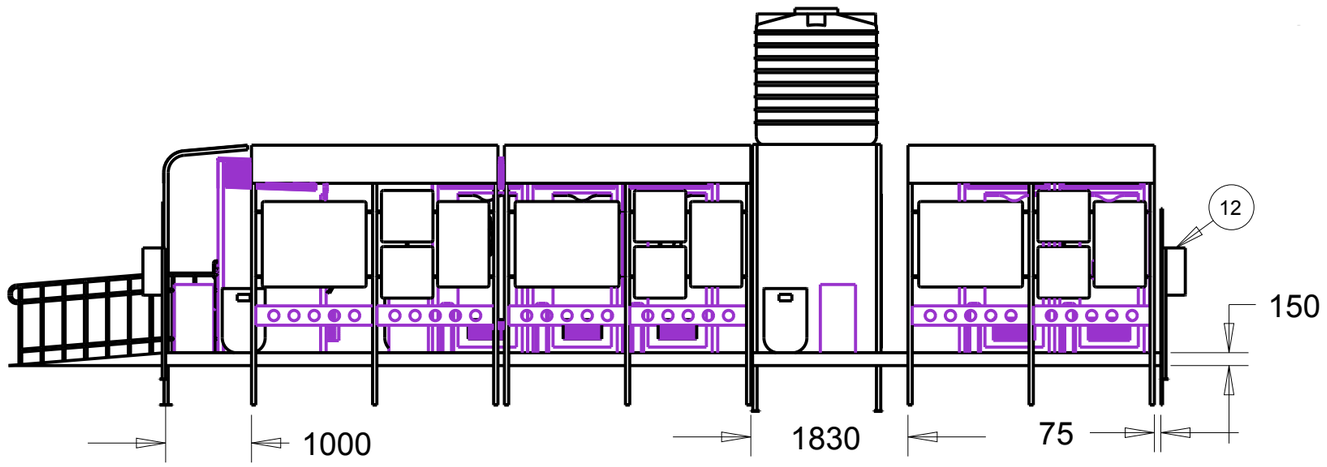

SLNO.	DESCRIPTION & DIMENSIONS	QTY	REF.DRG.	MAT.&SPEC.	WEIGHT/UNIT
16	URINAL	-		AISI304/COMPOSITES	
15	OHT-STRUCTURES	1		M.S/COMPOSITE	
14	WATER TANK 2000 LITRES	1		HDPE	
13	DUST BIN	3		MILD STEEL	
12	DIRECTION BOARD	2		M.S/COMPOSITE	
11	S.S RAILINGS FOR PC	2		AISI304	
10	M.S.PARTITION WITH COMPOSITE PANEL	1		MILD STEEL	
9	M.S. CHANNEL PARTITION	1		MILD STEEL	
8	PARTITION FRAME FOR PC (CANOPY)	1		AISI304/COMPOSITE	
7	PARTITION FRAME FRONT (CANOPY)	3		AISI304/COMPOSITE	
6	WASH BASIN WITH SOAP DISPENSOR	3		COMPOSITE/SSBASIN	
5	SOLAR POWERED STREET LIGHT	2		-	
4	SOLAR PANEL WITH LED LIGHT	6		-	
3	MEN MODULAR ROW TOILET STALL	2		COMPOSITE	
2	WOMEN MODULAR ROW TOILET STALL	3		COMPOSITE	
1	P.C. MODULAR TOILET STALL	1		COMPOSITE	

SUPERSEDED BY:	DRN	R.MAHENDRAN.
SUPERSEDES:	CHD	N.MASTAN
	APD	R K M

DRAWING NAME

NAMMA TOILET

1 PC + 3 REG WOMEN +2 REG MEN

DRAWING NUMBER

NT-UI-013

COMMISSIONERATE OF MUNICIPAL ADMINISTRATION,
CHEPAUK CHENNAI - 600005

SCALE 0.014

SHEET OF A3

ALT

A3

DRAWING NUMBER	SWACH COMPLEX
NT-UI-014	1 PC 4 REG MEN - 2 BATH
ALT	

ALT.No,	ALTERATION	DATE

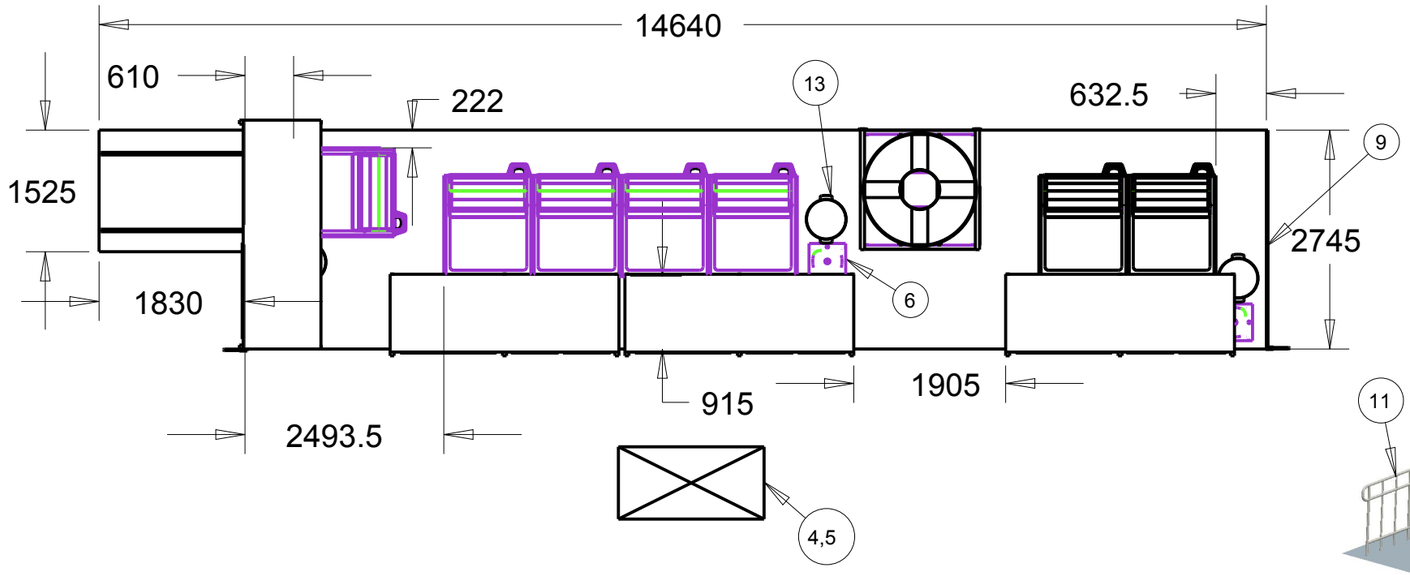

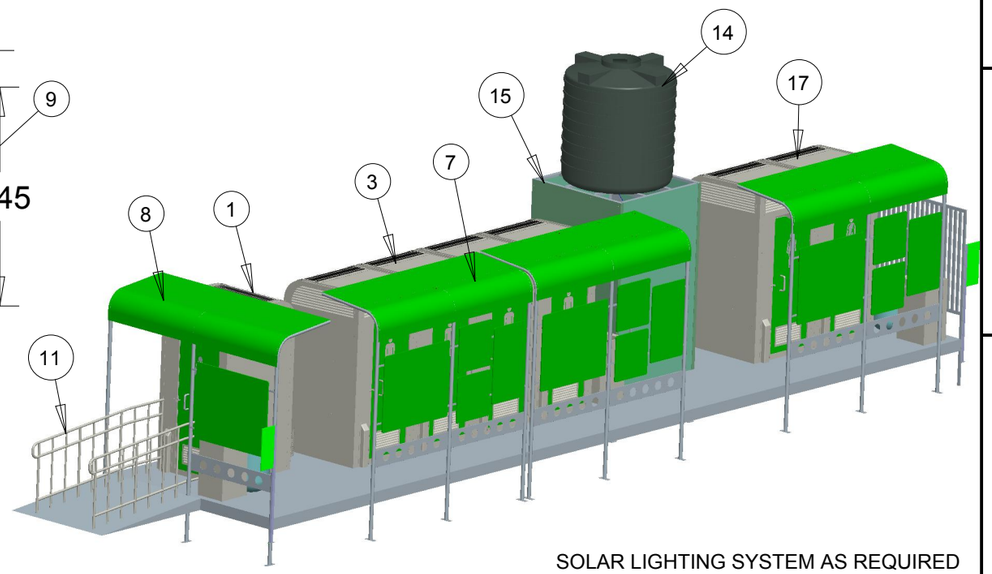

SOLAR LIGHTING SYSTEM AS REQUIRED

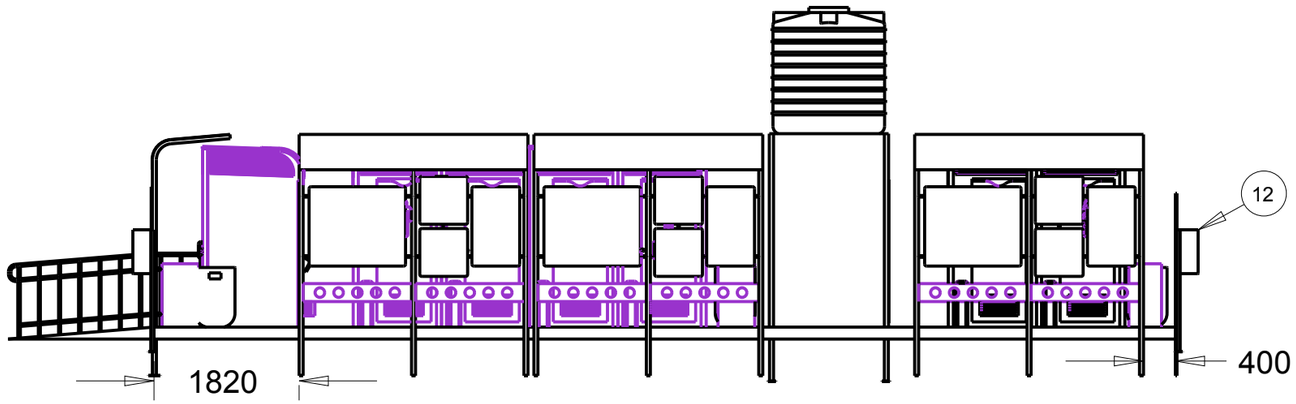

SLNO.	DESCRIPTION & DIMENSIONS	QTY	REF.DRG.	MAT.&SPEC.	WEIGHT/UNIT
17	BATHING STALL	2		COMPOSITE	
16	URINAL	-		AISI304/COMPOSITES	
15	OHT-STRUCTURES	1		M.S/COMPOSITE	
14	WATER TANK 2000 LITRES	1		HDPE	
13	DUST BIN	3		MILD STEEL	
12	DIRECTION BOARD	2		M.S/COMPOSITE	
11	S.S RAILINGS FOR PC	2		AISI304	
10	M.S.PARTITION WITH COMPOSITE PANEL	-		MILD STEEL	
9	M.S. CHANNEL PARTITION	1		MILD STEEL	
8	PARTITION FRAME FOR PC (CANOPY)	1		AISI304/COMPOSITE	
7	PARTITION FRAME FRONT (CANOPY)	3		AISI304/COMPOSITE	
6	WASH BASIN WITH SOAP DISPENSOR	3		COMPOSITE/SSBASIN	
5	SOLAR POWERED STREET LIGHT	2		-	
4	SOLAR PANEL WITH LED LIGHT	7		-	
3	MEN MODULAR ROW TOILET STALL	4		COMPOSITE	
2	WOMEN MODULAR ROW TOILET STALL	-		COMPOSITE	
1	P.C. MODULAR TOILET STALL	1		COMPOSITE	

SUPERSEDED BY:		DRN	R.MAHENDRAN.
SUPERSEDES:		CHD	N.MASTAN
		APD	R K M

DRAWING NAME

NAMMA TOILET

1 PC + 4 REG MEN + 2 BATH

DRAWING NUMBER

NT-UI-014

COMMISSIONERATE OF MUNICIPAL ADMINISTRATION,
CHEPAUK CHENNAI - 600005

SCALE 0.013

SHEET OF A3

ALT

A3

DRAWING NUMBER	SWACH COMPLEX
NT-UI-015	1 PC 4 REG WOMEN - 2 BATH
ALT	

ALT.No,	ALTERATION	DATE

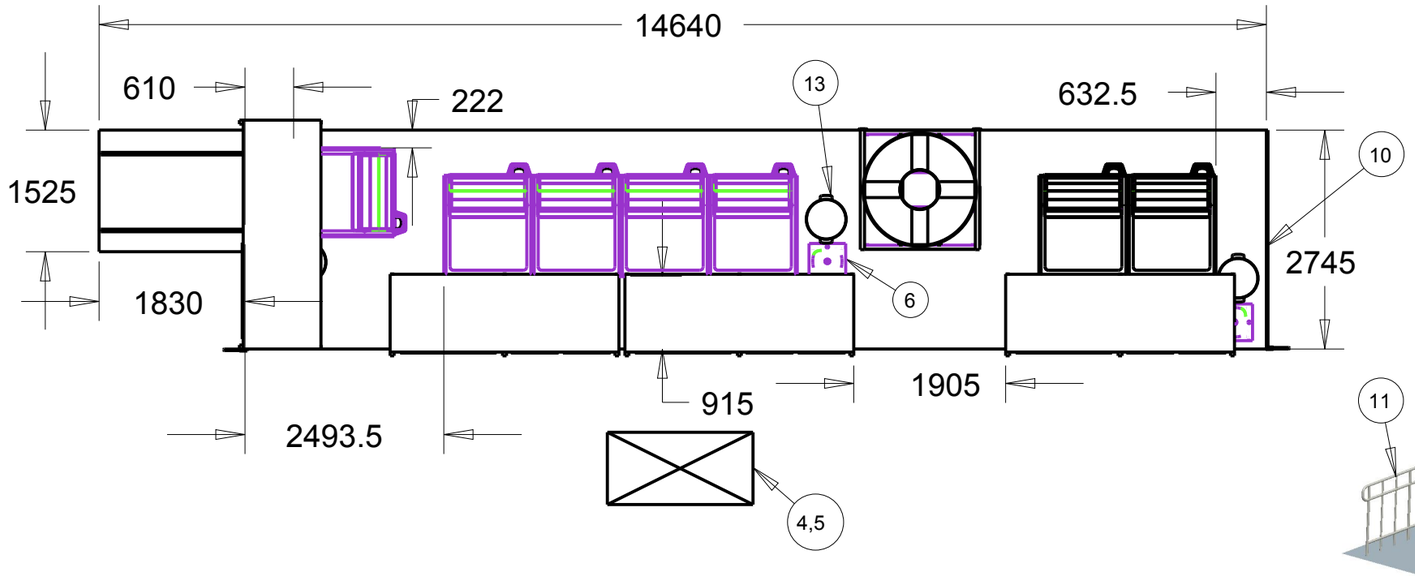

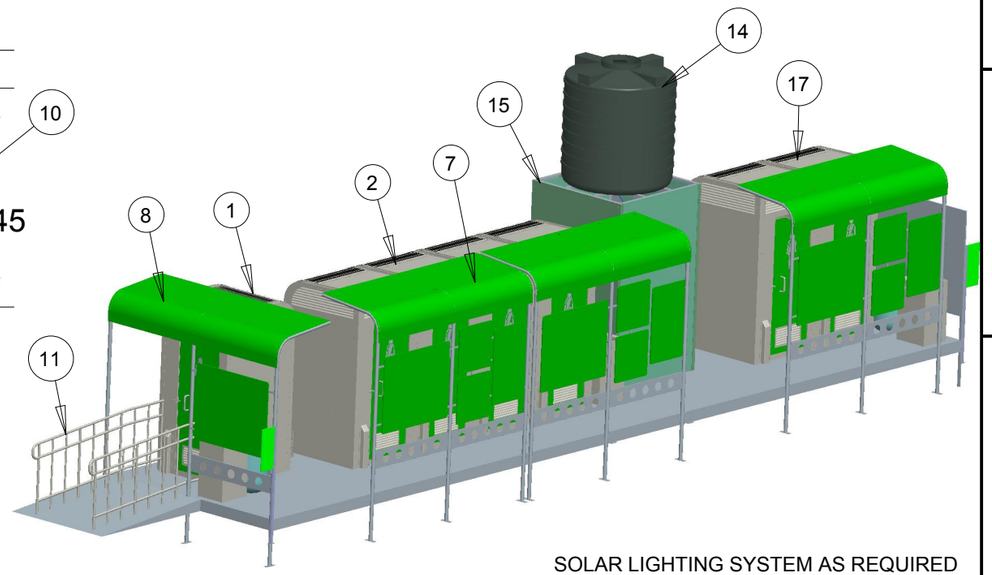

SOLAR LIGHTING SYSTEM AS REQUIRED

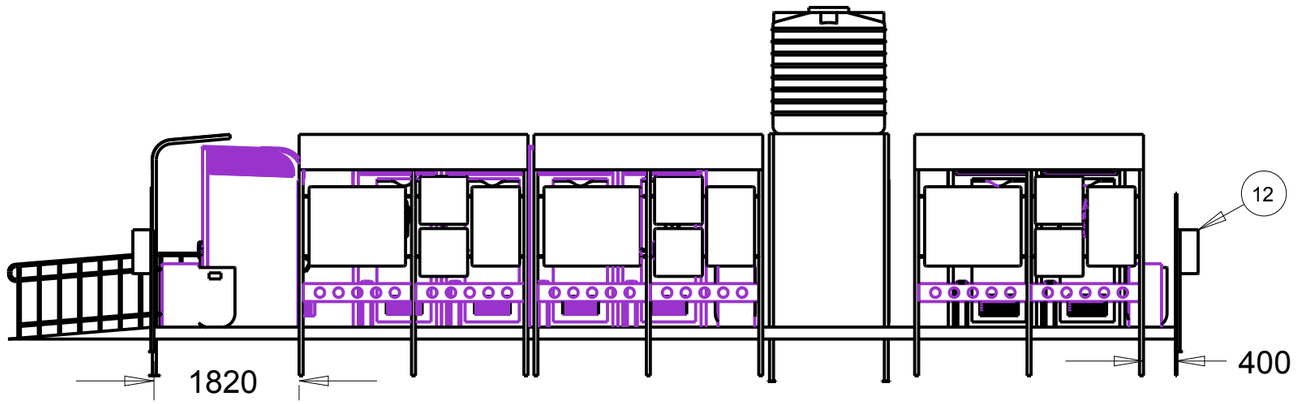

SLNO.	DESCRIPTION & DIMENSIONS	QTY	REF.DRG.	MAT.&SPEC.	WEIGHT/UNIT
17	BATHING STALL	2		COMPOSITE	
16	URINAL	-		AISI304/COMPOSITES	
15	OHT-STRUCTURES	1		M.S/COMPOSITE	
14	WATER TANK 2000 LITRES	1		HDPE	
13	DUST BIN	3		MILD STEEL	
12	DIRECTION BOARD	2		M.S/COMPOSITE	
11	S.S RAILINGS FOR PC	2		AISI304	
10	M.S.PARTITION WITH COMPOSITE PANEL	1		MILD STEEL	
9	M.S. CHANNEL PARTITION	-		MILD STEEL	
8	PARTITION FRAME FOR PC (CANOPY)	1		AISI304/COMPOSITE	
7	PARTITION FRAME FRONT (CANOPY)	3		AISI304/COMPOSITE	
6	WASH BASIN WITH SOAP DISPENSOR	3		COMPOSITE/SSBASIN	
5	SOLAR POWERED STREET LIGHT	2		-	
4	SOLAR PANEL WITH LED LIGHT	7		-	
3	MEN MODULAR ROW TOILET STALL	-		COMPOSITE	
2	WOMEN MODULAR ROW TOILET STALL	4		COMPOSITE	
1	P.C. MODULAR TOILET STALL	1		COMPOSITE	

SUPERSEDED BY:		DRN	R.MAHENDRAN.
SUPERSEDES:		CHD	N.MASTAN
DRAWING NAME	NAMMA TOILET 1 PC + 4 REG WOMEN + 2 BATH	APD	R K M
		DRAWING NUMBER	NT-UI-015
COMMISSIONERATE OF MUNICIPAL ADMINISTRATION, CHEPAUK CHENNAI - 600005		SCALE	0.013
		SHEET OF	A3
		ALT	

A3

DRAWING NUMBER	SWACH COMPLEX
NT-UI-016	1 PC 8 REG MEN - 4 BATH
ALT	

ALT.No,	ALTERATION	DATE

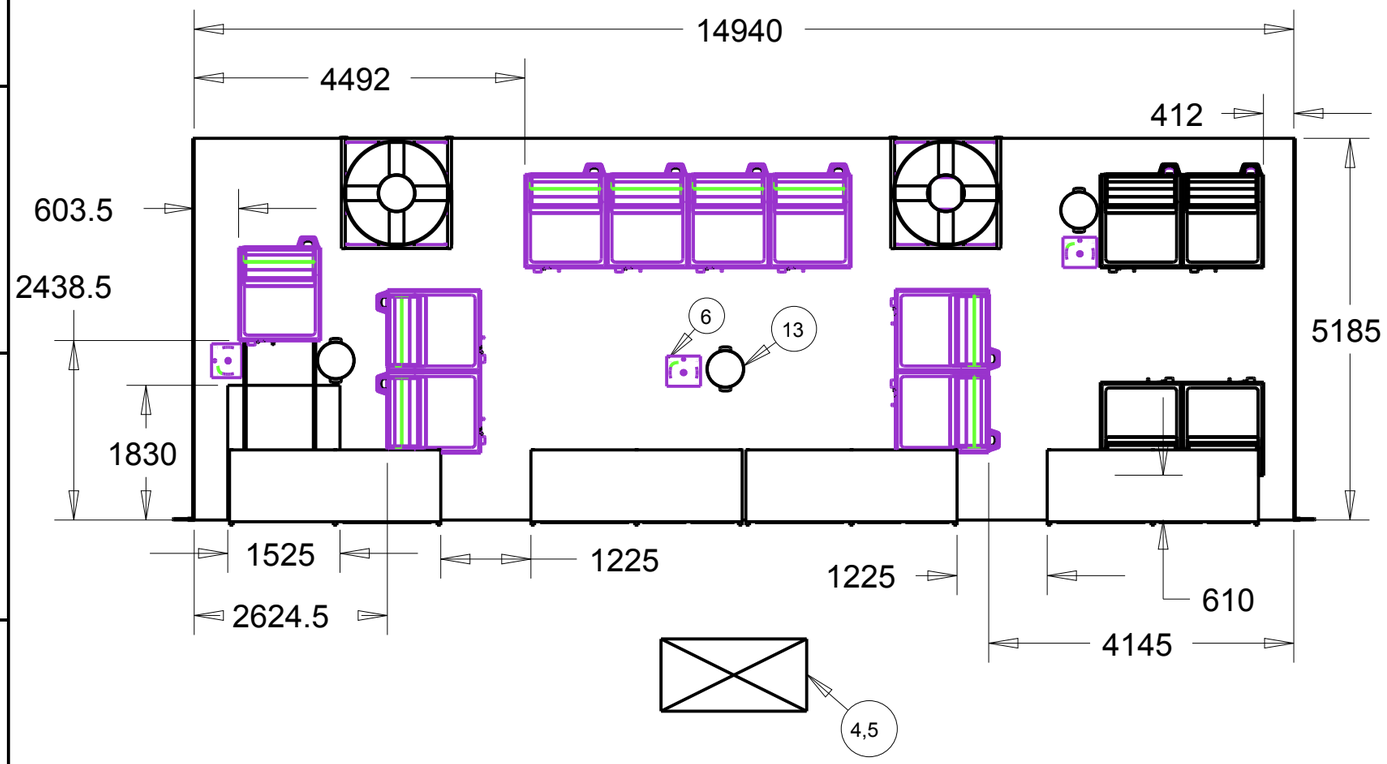

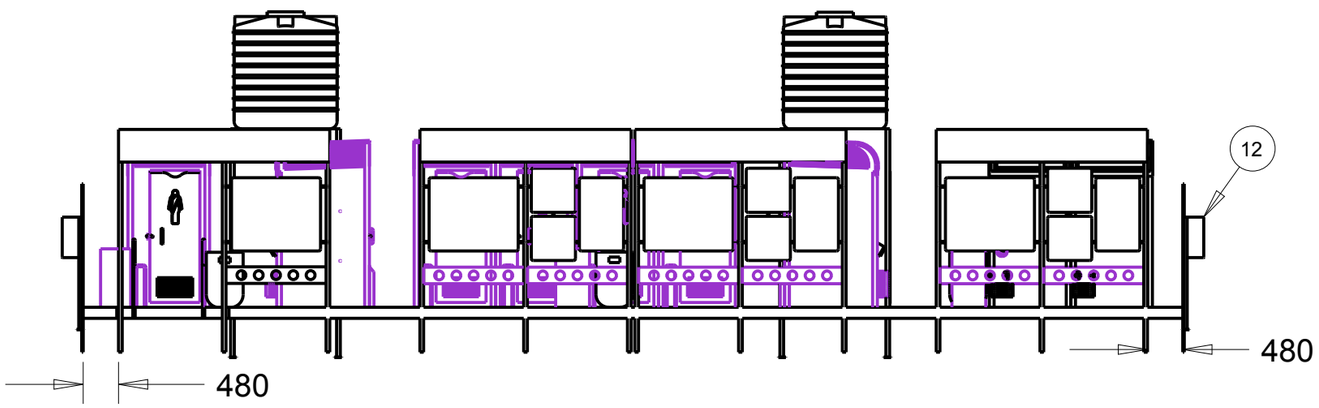

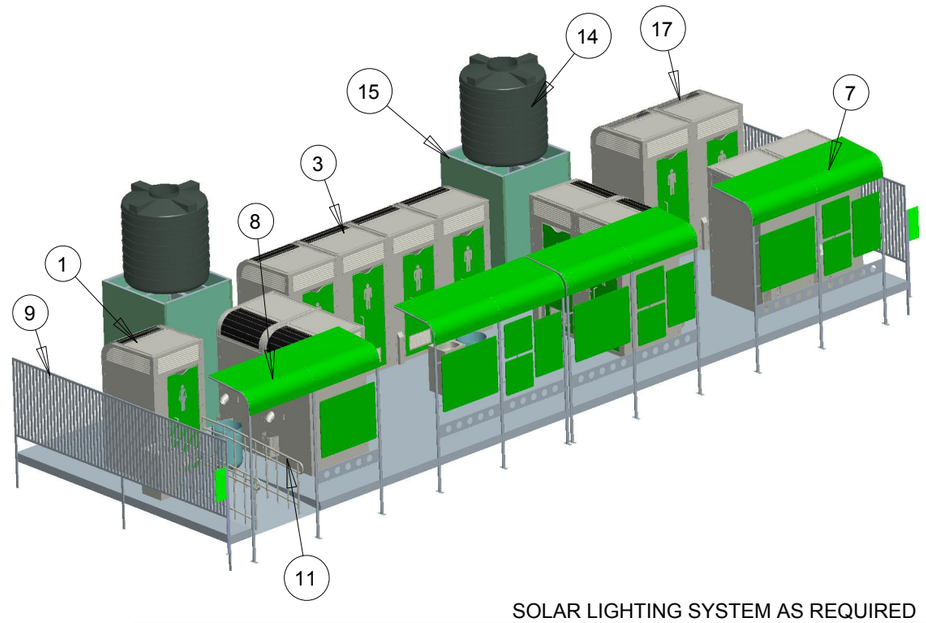

SOLAR LIGHTING SYSTEM AS REQUIRED

SLNO.	DESCRIPTION & DIMENSIONS	QTY	REF.DRG.	MAT.&SPEC.	WEIGHT/UNIT
17	BATHING STALL	4		COMPOSITE	
16	URINAL	-		AISI304/COMPOSITES	
15	OHT-STRUCTURES	2		M.S/COMPOSITE	
14	WATER TANK 2000 LITRES	2		HDPE	
13	DUST BIN	3		MILD STEEL	
12	DIRECTION BOARD	2		M.S/COMPOSITE	
11	S.S RAILINGS FOR PC	2		AISI304	
10	M.S.PARTITION WITH COMPOSITE PANEL	-		MILD STEEL	
9	M.S. CHANNEL PARTITION	2		MILD STEEL	
8	PARTITION FRAME FOR PC (CANOPY)	1		AISI304/COMPOSITE	
7	PARTITION FRAME FRONT (CANOPY)	3		AISI304/COMPOSITE	
6	WASH BASIN WITH SOAP DISPENSOR	3		COMPOSITE/SSBASIN	
5	SOLAR POWERED STREET LIGHT	4		-	
4	SOLAR PANEL WITH LED LIGHT	13		-	
3	MEN MODULAR ROW TOILET STALL	8		COMPOSITE	
2	WOMEN MODULAR ROW TOILET STALL	-		COMPOSITE	
1	P.C. MODULAR TOILET STALL	1		COMPOSITE	

SUPERSEDED BY:	DRN	R.MAHENDRAN.
SUPERSEDES:	CHD	N.MASTAN
	APD	R K M

DRAWING NAME

NAMMA TOILET

1 PC + 8 REG MEN + 4BATH

DRAWING NUMBER

NT-UI-016

COMMISSIONERATE OF MUNICIPAL ADMINISTRATION,
CHEPAUK CHENNAI - 600005

SCALE 0.012

SHEET OF A3

ALT

A3

DRAWING NUMBER	SWACH COMPLEX
NT-UI-017	1 PC 8 REG WOMEN - 4 BATH
ALT	

ALT.No,	ALTERATION	DATE

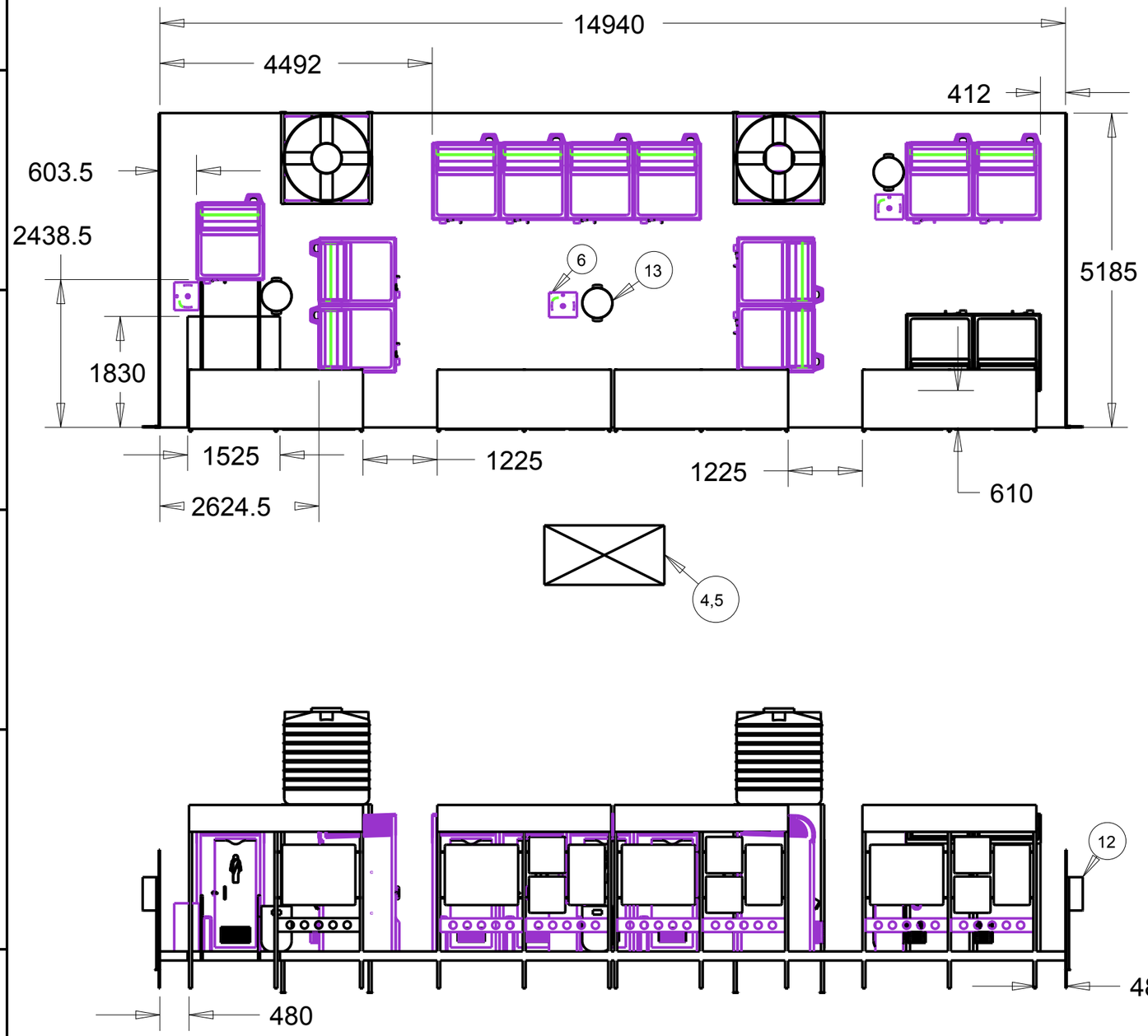

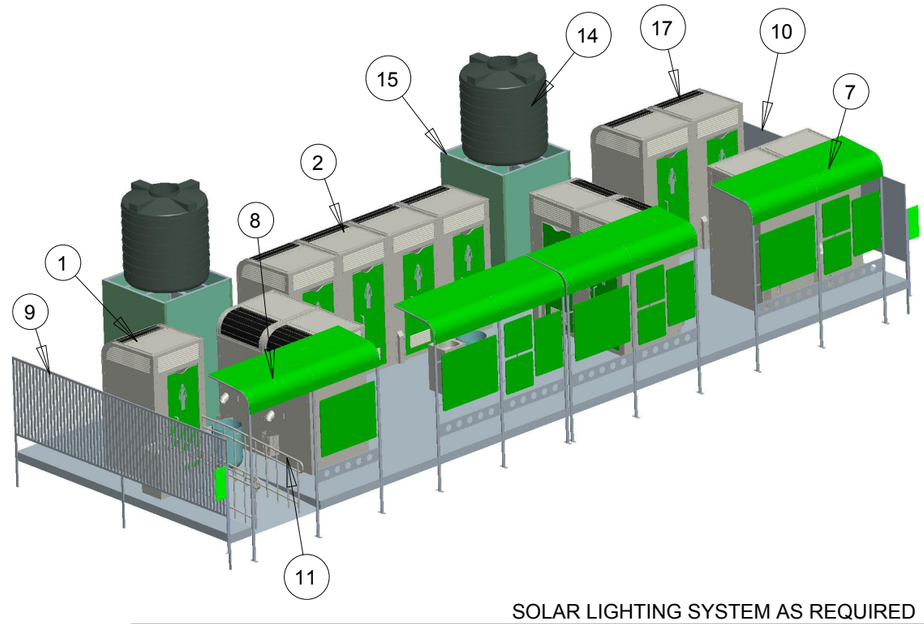

SOLAR LIGHTING SYSTEM AS REQUIRED

SLNO.	DESCRIPTION & DIMENSIONS	QTY	REF.DRG.	MAT.&SPEC.	WEIGHT/UNIT
17	BATHING STALL	4		COMPOSITE	
16	URINAL	-		AISI304/COMPOSITES	
15	OHT-STRUCTURES	2		M.S/COMPOSITE	
14	WATER TANK 2000 LITRES	2		HDPE	
13	DUST BIN	3		MILD STEEL	
12	DIRECTION BOARD	2		M.S/COMPOSITE	
11	S.S RAILINGS FOR PC	2		AISI304	
10	M.S.PARTITION WITH COMPOSITE PANEL	1		MILD STEEL	
9	M.S. CHANNEL PARTITION	1		MILD STEEL	
8	PARTITION FRAME FOR PC (CANOPY)	1		AISI304/COMPOSITE	
7	PARTITION FRAME FRONT (CANOPY)	3		AISI304/COMPOSITE	
6	WASH BASIN WITH SOAP DISPENSOR	3		COMPOSITE/SSBASIN	
5	SOLAR POWERED STREET LIGHT	4		-	
4	SOLAR PANEL WITH LED LIGHT	13		-	
3	MEN MODULAR ROW TOILET STALL	-		COMPOSITE	
2	WOMEN MODULAR ROW TOILET STALL	8		COMPOSITE	
1	P.C. MODULAR TOILET STALL	1		COMPOSITE	

SUPERSEDED BY:	DRN	R.MAHENDRAN.
SUPERSEDES:	CHD	N.MASTAN
	APD	R K M

DRAWING NAME

NAMMA TOILET

1 PC + 8 REG WOMEN + 4BATH

DRAWING NUMBER

NT-UI-017

COMMISSIONERATE OF MUNICIPAL ADMINISTRATION,
CHEPAUK CHENNAI - 600005

SCALE 0.012

SHEET OF A3

ALT

A3